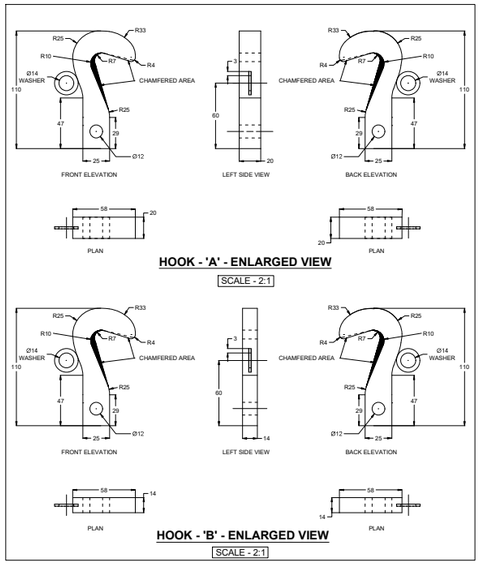

HOOK - 'A' - ENLARGED VIEW

SCALE - 2:1

HOOK - 'B' - ENLARGED VIEW

SCALE - 2:1

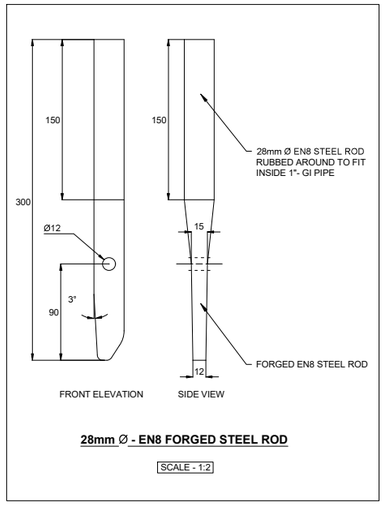

28mm Ø - EN8 FORGED STEEL ROD

SCALE - 1:2

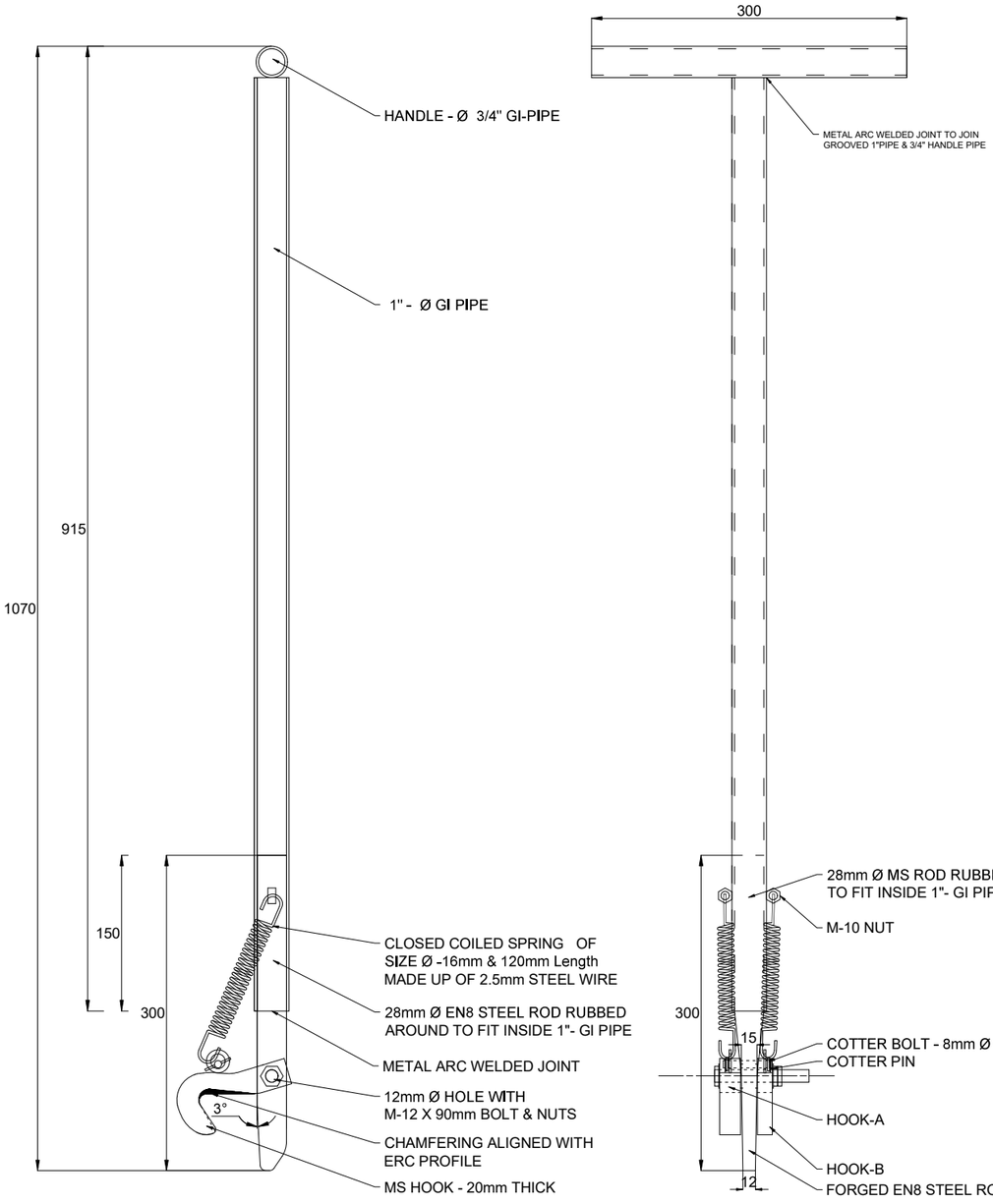

RIGHT SIDE VIEW

FRONT VIEW

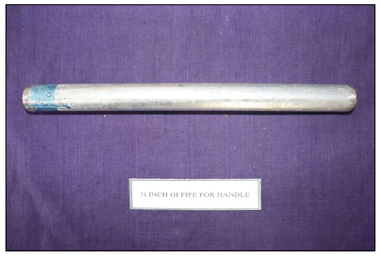















ERC APPLICATOR CUM EXTRACTOR

SCALE - 1:2





NOTES:

1. ALL DIMENSIONS ARE IN mm UNLESS OTHERWISE SPECIFIED.
2. 1"- GI PIPE & 3/4"- GI HANDLE PIPES USED SHALL CONFORM TO IS 1239 (PART-I):2004 STEEL TUBES,TUBULARS & OTHER WROUGHT STEEL FITTINGS .
3. CLOSED COILED HELICAL SPRING USED SHALL CONFORM TO IS 7907 (PART-I):2004 HELICAL EXTENSION SPRINGS.
4. 28mm DIAMETER - EN8 STEEL ROD USED SHALL CONFORM TO THE STANDARD OF BS 970-1955.
5. FORGING PROCESS SHALL BE DONE AS PER THE THE STANDARD OF BS 970-1955.
6. BOLTS & NUTS SHALL CONFORM TO IS 1364-1 (2002): HEXAGON HEAD BOLTS, SCREWS AND NUTS OF PRODUCT GRADES A AND B, PART 1: HEXAGON HEAD BOLTS (SIZE RANGE M 1.6 TO M 64).
7. HOOK 'A' & 'B' SHALL BE MADE FROM GAS CUTTING OF 20mm & 14mm THICK MS PLATES RESPECTIVELY. THE MS PLATES USED SHALL CONFORM TO THE IS 2062 (2011): HOT ROLLED MEDIUM AND HIGH TENSILE STRUCTURAL STEEL.
8. COTTER ROD - 8mm DIAMETER MS ROD USED SHALL CONFORM TO IS 432-1 (1982): MILD STEEL AND MEDIUM TENSILE STEEL BARS AND HARD-DRAWN STEEL WIRE FOR CONCRETE REINFORCEMENT.
9. ALL WELDING WORKS SHALL CONFORM TO IS 816 (1969): CODE OF PRACTICE FOR USE OF METAL ARC WELDING FOR GENERAL CONSTRUCTION IN MILD STEEL.

SOUTHERN RAILWAY - TIRUCHCHIRAPPALLI DIVISION

ELASTIC RAIL CLIP APPLICATOR CUM EXTRACTOR SUITABLE FOR BOTH MARK-3 & MARK-5 CLIPS

Signature block

SSE-STM-TPJ	KARUPPIAH MANGUDI	Digitally signed by KARUPPIAH MANGUDI Date: 2024.03.20 14:08:21 +05'30'
ADEN-CEN-TPJ	MANICKAVASAGAM NATARAJAN	Digitally signed by MANICKAVASAGAM NATARAJAN Date: 2024.03.27 16:10:41 +05'30'
DEN-CEN-TPJ	ULAGANATHAN ARULMOZHI	Digitally signed by ULAGANATHAN ARULMOZHI Date: 2024.03.27 16:23:20 +05'30'
SRDENCO-TPJ	ARUTJOTHI THIRUMAL	Digitally signed by ARUTJOTHI THIRUMAL Date: 2024.03.27 16:27:38 +05'30'

DRG No. 1

Signature Not Verified
Digitally signed by THANGAVEL SUBRAMANIAN
Date: 2024.10.15 15:38:40 IST
Reason: IREPS-CRIS
Location: New Delhi