Signature Not Verified
Digitally signed by V RAJA
Date: 2026.12.28 12:47:21 IST
Reason: IREPS Document
Location: IREPS-CRIS

AAB12134

▽ ROUGH MACHINED	(01) ROUGH CLEANED
▽▽ FINISH MACHINED	(01b) BURRS REMOVED
▽▽▽ FINE FINISH MACHINED	(18) CHAMFERED

REVISIONS			
ALT.	ZONE	DESCRIPTION	APPROVED & DATE

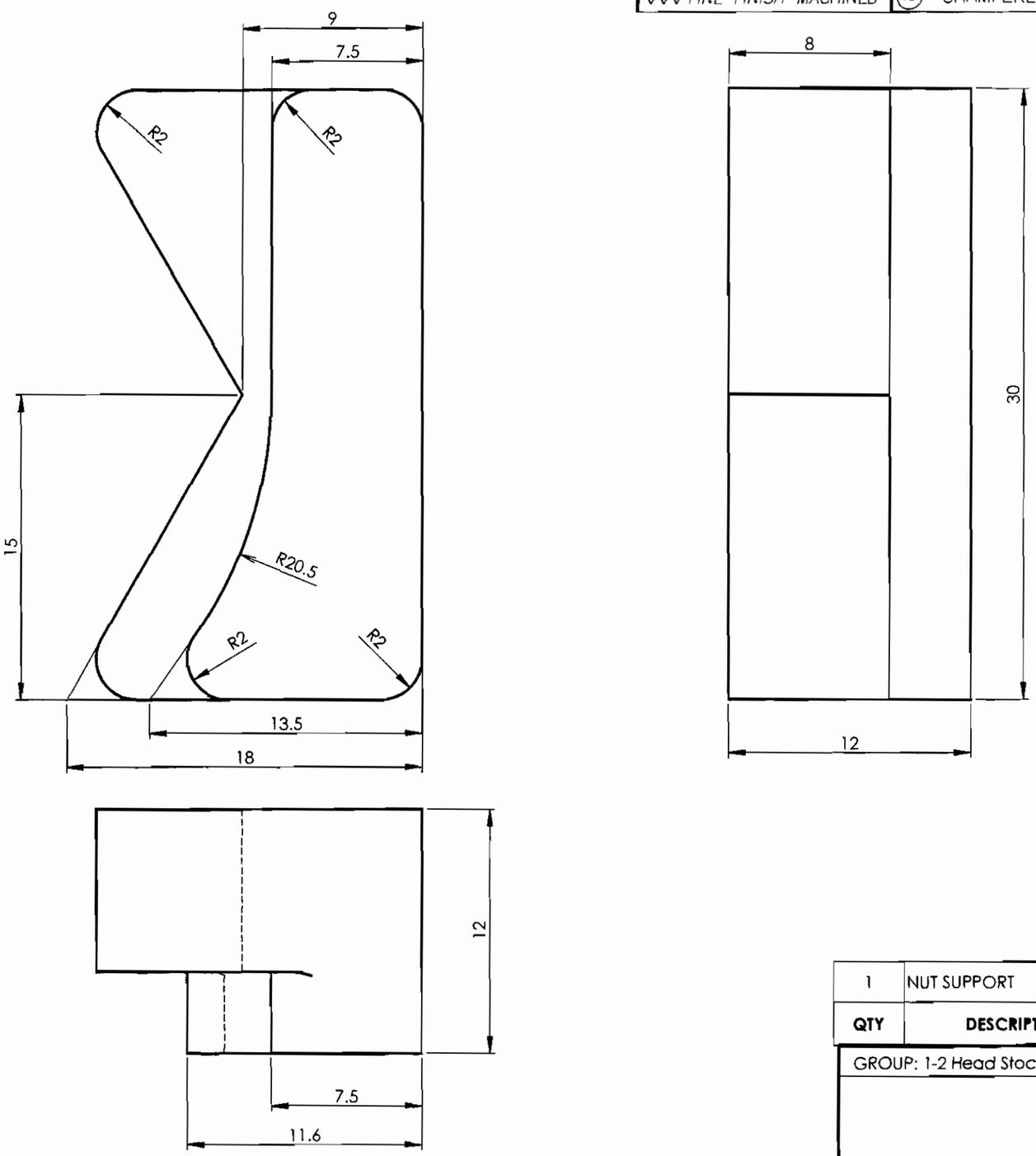

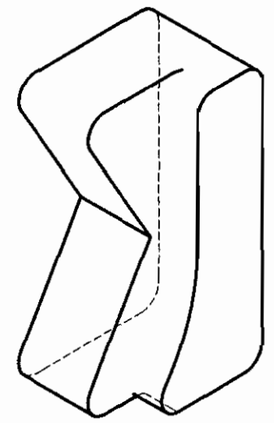

ALL DIMENSIONS ARE IN mm UNLESS OTHERWISE SPECIFIED. FOR UNTOLERANCED DIMENSIONS AND ROUGHNESS VALUES, REFER DRAWING NO ICF/STD-9-0-001.
ANY MANUAL ALTERATION SHALL AUTOMATICALLY RENDER THIS DRAWING INVALID. WELDING SYMBOLS ARE AS PER EN ISO 2553.
WEIGHT GIVEN IN DRAWING IS FOR INDICATIVE PURPOSE ONLY

NOTE:

1. ALL EDGE PREPARATION SHALL BE DONE BY MACHINING ONLY TO GRADE No. N10.
2. REMOVE ALL SHARP EDGES & BURRS.

QTY	DESCRIPTION	DIMENSIONS	ITEM NO.	REF. DRGS	MATL.SPEC.	WT/UNIT IN KGS	REMARKS
1	NUT SUPPORT	12x18x30	1		EN10025-5 2004 S355J2W N	0.03	

GROUP: 1-2 Head Stock | SURFACE AREA IN Sq.m.: | WT/ASSY IN Kgs:

NUT SUPPORT

SCALE 4:1	SSE/D	
	CHD	
ALT. -	ALTD	
	DRN	S MUTHUKUMARAN

INDIAN RAILWAY STANDARDS
INTEGRAL COACH FACTORY, CHENNAI - 600038

SHEET 1 OF 1

AAB12134 A3

DATE OF LATEST ALT.	DATE OF FIRST ISSUE	AME/SME
	06-06-2024	

REF.DRG.NO.

AAB12135

▽ ROUGH MACHINED	(01) ROUGH CLEANED
▽▽ FINISH MACHINED	(01b) BURRS REMOVED
▽▽▽ FINE FINISH MACHINED	(18) CHAMFERED

REVISIONS			
AEL	ZONE	DESCRIPTION	APPROVED & DATE

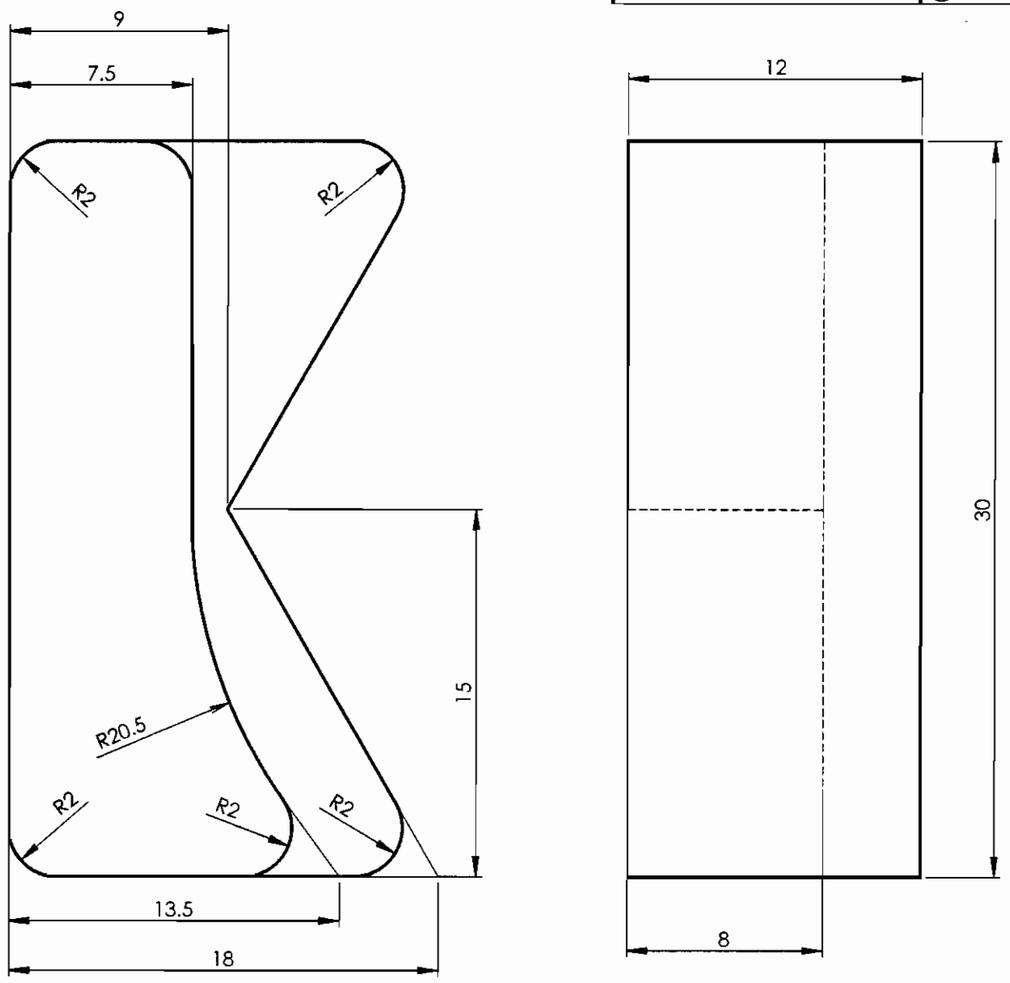

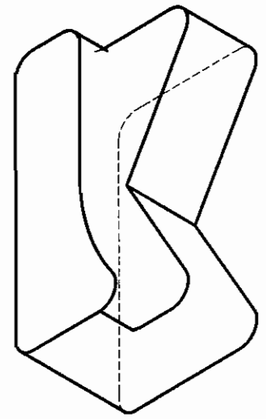

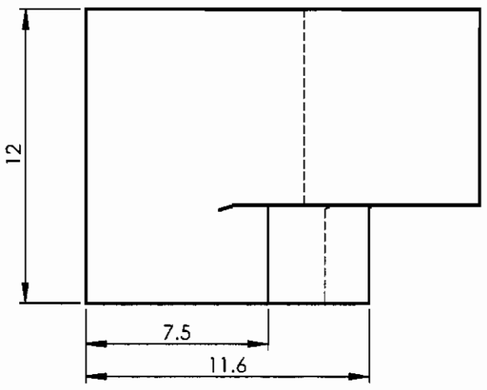

NOTE:

1. ALL EDGE PREPARATION SHALL BE DONE BY MACHINING ONLY TO GRADE No. N10.
2. REMOVE ALL SHARP EDGES & BURRS.

QTY	DESCRIPTION	DIMENSIONS	ITEM NO.	REF. DRGS	MATL.SPEC.	WT/UNIT IN KGS	REMARKS
1	NUT SUPPORT	12x18x30	1		EN10025-5 2004 S355J2W N	0.03	

GROUP: 1-2 Head Stock | SURFACE AREA IN Sq.m.: | WT/ASSY IN Kgs:

NUT SUPPORT

SCALE 2:1	SSE/D	
	CHD	
ALT. -	ALTD	
	DRN	S MUTHUKUMARAN

INDIAN RAILWAY STANDARDS

INTEGRAL COACH FACTORY, CHENNAI - 600038

SHEET 1 OF 1

AAB12135 A3

DATE OF LATEST ALT.	DATE OF FIRST ISSUE	AME/SME
	06-06-2024	

REF.DRG.NO.

ALL DIMENSIONS ARE IN mm UNLESS OTHERWISE SPECIFIED. FOR UNTOLERANCED DIMENSIONS AND ROUGHNESS VALUES, REFER DRAWING NO ICF/STD-9-0-001.
ANY MANUAL ALTERATION SHALL AUTOMATICALLY RENDER THIS DRAWING INVALID. WELDING SYMBOLS ARE AS PER EN ISO 2553.
WEIGHT GIVEN IN DRAWING IS FOR INDICATIVE PURPOSE ONLY

AAB12140

▽ ROUGH MACHINED	(01) ROUGH CLEANED
▽▽ FINISH MACHINED	(01b) BURRS REMOVED
▽▽▽ FINE FINISH MACHINED	(18) CHAMFERED

REVISIONS			
ALT.	ZONE	DESCRIPTION	APPROVED & DATE

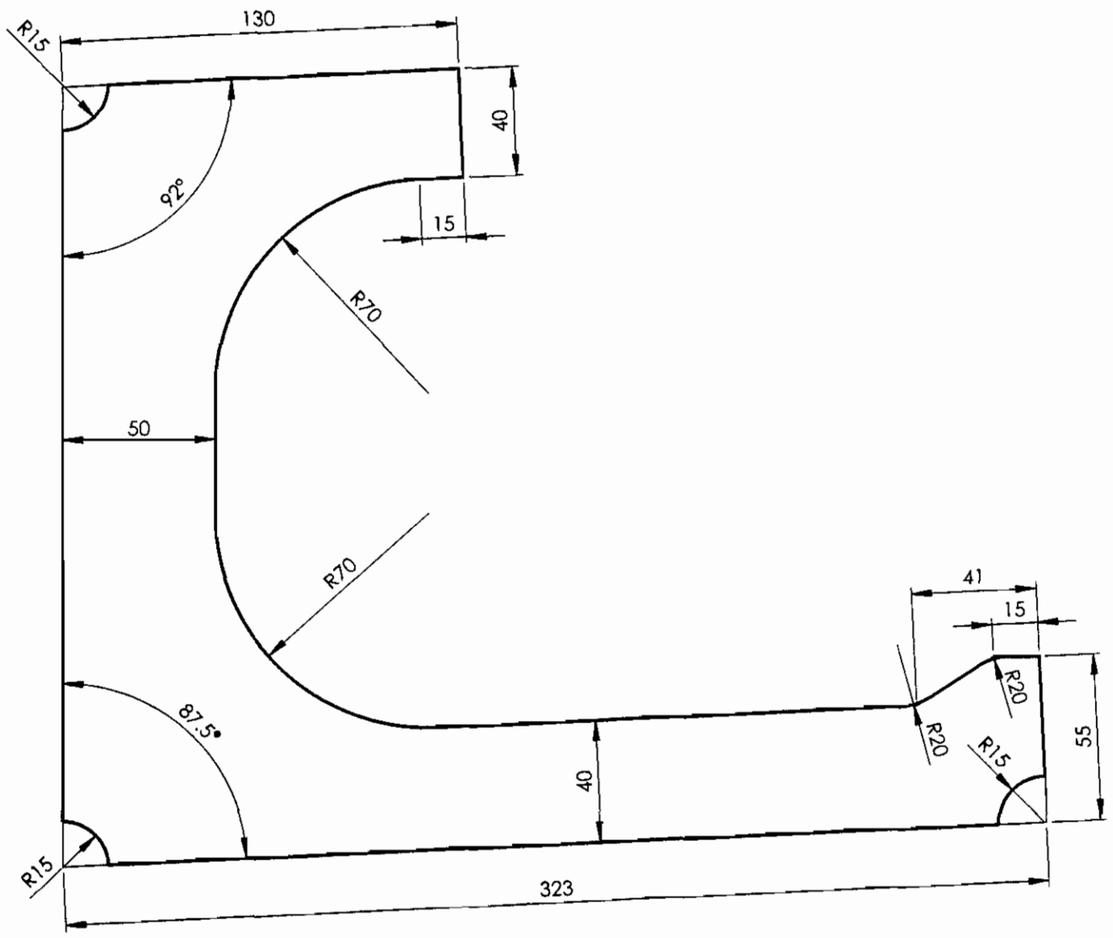

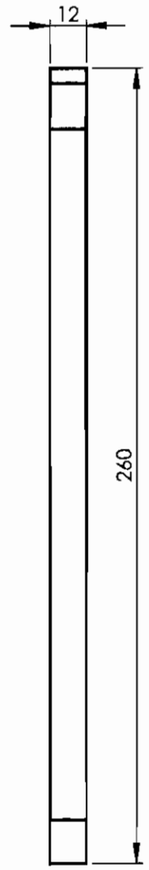

ALL DIMENSIONS ARE IN mm UNLESS OTHERWISE SPECIFIED. FOR UNTOLERANCED DIMENSIONS AND ROUGHNESS VALUES, REFER DRAWING NO ICF/STD-9-0-0001.
ANY MANUAL ALTERATION SHALL AUTOMATICALLY RENDER THIS DRAWING INVALID. WELDING SYMBOLS ARE AS PER EN ISO 2553.
WEIGHT GIVEN IN DRAWING IS FOR INDICATIVE PURPOSE ONLY

NOTE:

1. ALL EDGE PREPARATION SHALL BE DONE BY MACHINING ONLY TO GRADE No. N10.
2. REMOVE ALL SHARP EDGES & BURRS.

QTY	DESCRIPTION	DIMENSIONS	ITEM NO.	REF. DRGS	MATL.SPEC.	WT/UNIT IN KGS	REMARKS
1	GUSSET	12x260x323	1		EN10025-5 2004 S355J2W N	2.69	

GROUP: 1-2 Head Stock | SURFACE AREA IN Sq.m.: | WT/ASSY IN Kgs:

GUSSET

SCALE	SSE/D	
1:2	CHD	
ALT. -	ALTD	
	DRN	S MUTHUKUMARAN

INDIAN RAILWAY STANDARDS
INTEGRAL COACH FACTORY, CHENNAI - 600038

SHEET 1 OF 1

AAB12140 | A3

DATE OF LATEST ALT.	DATE OF FIRST ISSUE	AME/SME
	06-06-2024	

REF.DRG.NO.

AAB12141

▽ ROUGH MACHINED	(01) ROUGH CLEANED
▽▽ FINISH MACHINED	(01b) BURRS REMOVED
▽▽▽ FINE FINISH MACHINED	(18) CHAMFERED

REVISIONS			
ALT.	ZONE	DESCRIPTION	APPROVED & DATE

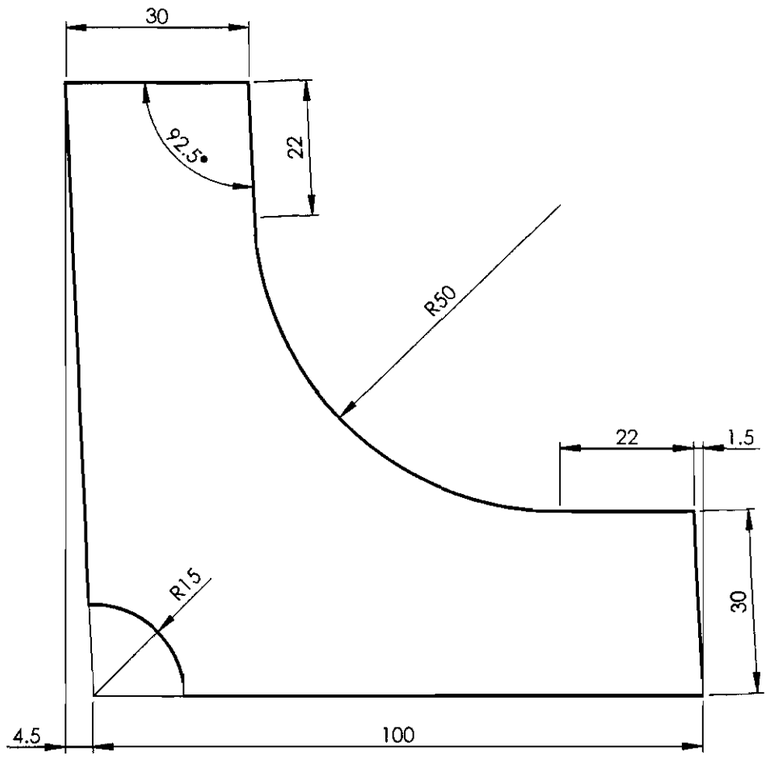

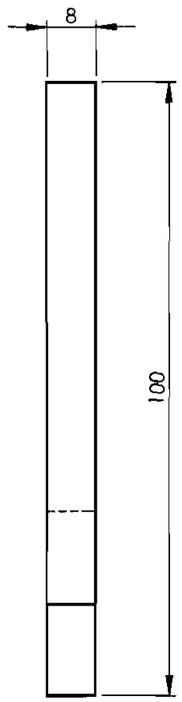

ALL DIMENSIONS ARE IN mm UNLESS OTHERWISE SPECIFIED. FOR UNTOLERANCED DIMENSIONS AND ROUGHNESS VALUES, REFER DRAWING NO ICF/STD-9-0-001.
ANY MANUAL ALTERATION SHALL AUTOMATICALLY RENDER THIS DRAWING INVALID. WELDING SYMBOLS ARE AS PER EN ISO 2553.
WEIGHT GIVEN IN DRAWING IS FOR INDICATIVE PURPOSE ONLY

NOTE:

1. ALL EDGE PREPARATION SHALL BE DONE BY MACHINING ONLY TO GRADE No. N10.
2. REMOVE ALL SHARP EDGES & BURRS.

QTY	DESCRIPTION	DIMENSIONS	ITEM NO.	REF. DRGS	MATL.SPEC.	WT/UNIT IN KGS	REMARKS
1	STIFFENER	8x100x105	1		IRS M-41-97	0.34	

GROUP: 1-2 Head Stock | SURFACE AREA IN Sq.m.: | WT/ASSY IN Kgs:

STIFFENER

SCALE 1:1	SSE/D	
	CHD	
ALT. -	ALTD	
	DRN	S MUTHUKUMARAN

INDIAN RAILWAY STANDARDS
INTEGRAL COACH FACTORY, CHENNAI - 600038

SHEET 1 OF 1

AAB12141 A3

DATE OF LATEST ALT.	DATE OF FIRST ISSUE	AME/SME
	06-06-2024	

REF.DRG.NO.

AAB12142

▽ ROUGH MACHINED	(01) ROUGH CLEANED
▽▽ FINISH MACHINED	(01b) BURRS REMOVED
▽▽▽ FINE FINISH MACHINED	(18) CHAMFERED

REVISIONS			
ALT.	ZONE	DESCRIPTION	APPROVED & DATE
a		DESIGN REVISED.	

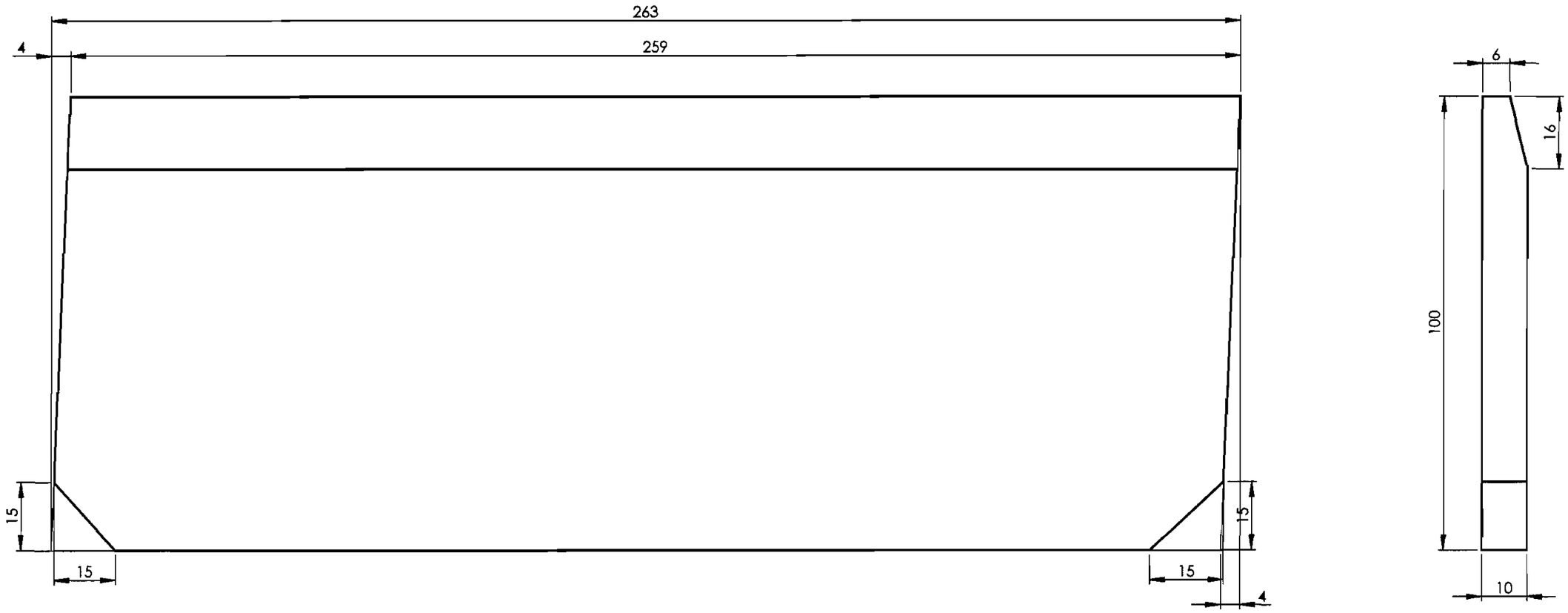

ALL DIMENSIONS ARE IN mm UNLESS OTHERWISE SPECIFIED. FOR UNTOLERANCED DIMENSIONS AND ROUGHNESS VALUES, REFER DRAWING NO ICF/STD-9-0-001.
ANY MANUAL ALTERATION SHALL AUTOMATICALLY RENDER THIS DRAWING INVALID. WELDING SYMBOLS ARE AS PER EN ISO 2553.
WEIGHT GIVEN IN DRAWING IS FOR INDICATIVE PURPOSE ONLY

NOTE:

1. ALL EDGE PREPARATION SHALL BE DONE BY MACHINING ONLY TO GRADE No. N10.
2. REMOVE ALL SHARP EDGES & BURRS.

QTY	DESCRIPTION	DIMENSIONS	ITEM NO.	REF. DRGS	MATL.SPEC.	WT/UNIT IN KGS	REMARKS
1	PLATE	10x100x263	1		IRS M-41-97	1.95	

GROUP: 1-2 | SURFACE AREA IN Sq.m.: | WT/ASSY IN Kgs:

PLATE

SCALE	SSE/D	
1:2	CHD	
ALT. a	ALTD	MUTHU KUMARAN S
	DRN	MUTHU KUMARAN S

DATE OF LATEST ALT.	DATE OF FIRST ISSUE	AME/SME
07-2024	05-06-2024	

REF.DRG.NO.

INDIAN RAILWAY STANDARDS
INTEGRAL COACH FACTORY, CHENNAI - 600038

SHEET 1 OF 1

AAB12142 A3

AAB12143

▽ ROUGH MACHINED	(01) ROUGH CLEANED
▽▽ FINISH MACHINED	(01b) BURRS REMOVED
▽▽▽ FINE FINISH MACHINED	(18) CHAMFERED

REVISIONS			
ALT.	ZONE	DESCRIPTION	APPROVED & DATE
a		DESIGN REVISED.	

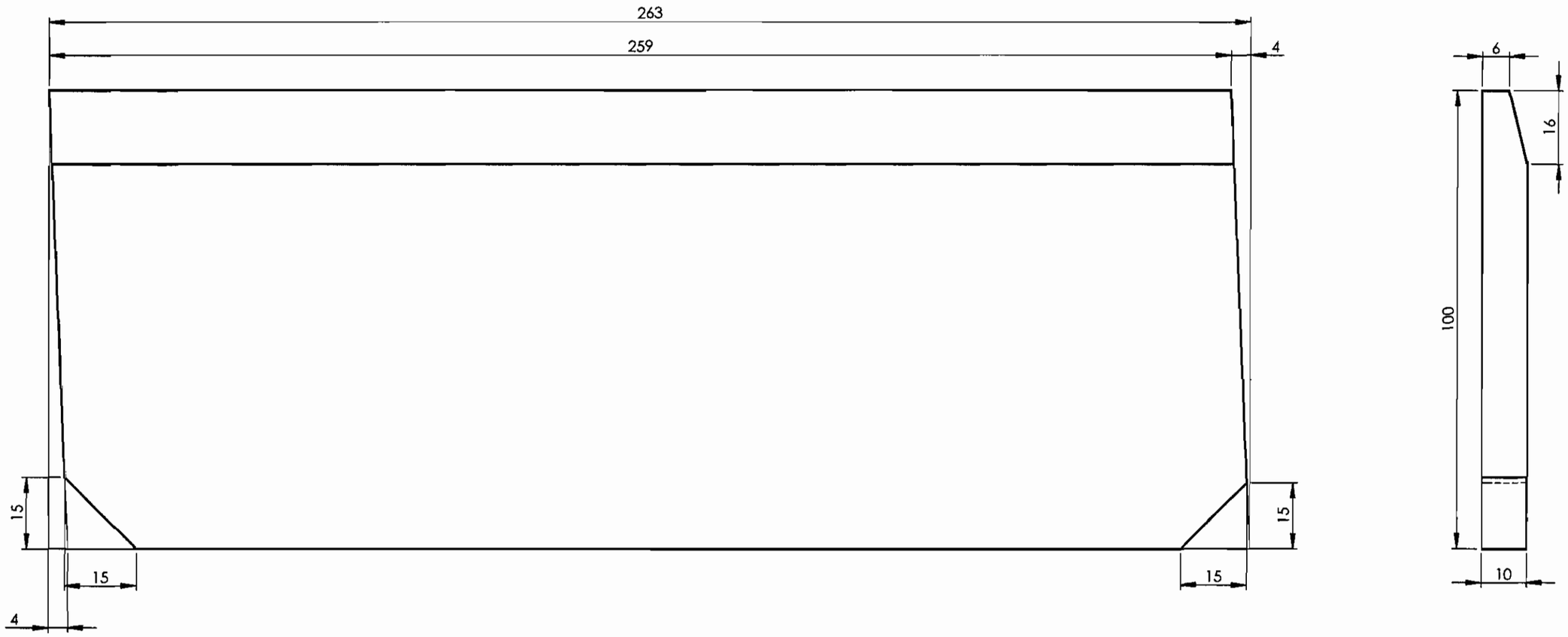

ALL DIMENSIONS ARE IN mm UNLESS OTHERWISE SPECIFIED. FOR UNTOLERANCED DIMENSIONS AND ROUGHNESS VALUES, REFER DRAWING NO ICF/STD-9-0-001.
ANY MANUAL ALTERATION SHALL AUTOMATICALLY RENDER THIS DRAWING INVALID. WELDING SYMBOLS ARE AS PER EN ISO 2553.
WEIGHT GIVEN IN DRAWING IS FOR INDICATIVE PURPOSE ONLY

NOTE:

1. ALL EDGE PREPARATION SHALL BE DONE BY MACHINING ONLY TO GRADE No. N10.
2. REMOVE ALL SHARP EDGES & BURRS.

QTY	DESCRIPTION	DIMENSIONS	ITEM NO.	REF. DRGS	MATL.SPEC.	WT/UNIT IN KGS	REMARKS
1	PLATE	10x100x263	1		IRS M-41-97	1.95	

GROUP: 1-2 | SURFACE AREA IN Sq.m.: | WT/ASSY IN Kgs:

PLATE

SCALE		
1:2	SSE/D	
	CHD	
ALT. a	ALTD	MUTHU KUMARAN S
	DRN	MUTHU KUMARAN S

INDIAN RAILWAY STANDARDS
INTEGRAL COACH FACTORY, CHENNAI - 600038

SHEET 1 OF 1

AAB12143 | A3

DATE OF LATEST ALT.	DATE OF FIRST ISSUE	AME/SME
12-07-2024	05-06-2024	

REF.DRG.NO.

AAB12144

▽ ROUGH MACHINED	(01) ROUGH CLEANED
▽▽ FINISH MACHINED	(01b) BURRS REMOVED
▽▽▽ FINE FINISH MACHINED	(18) CHAMFERED

REVISIONS			
ALT.	ZONE	DESCRIPTION	APPROVED & DATE
a		DESIGN REVISED	

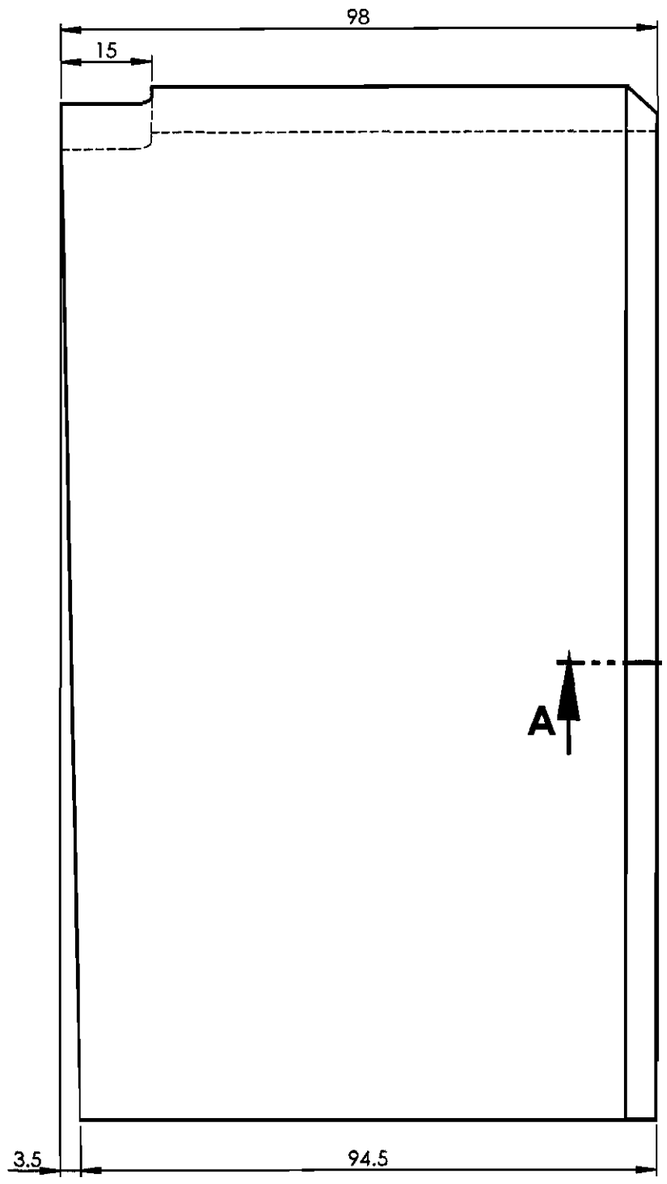

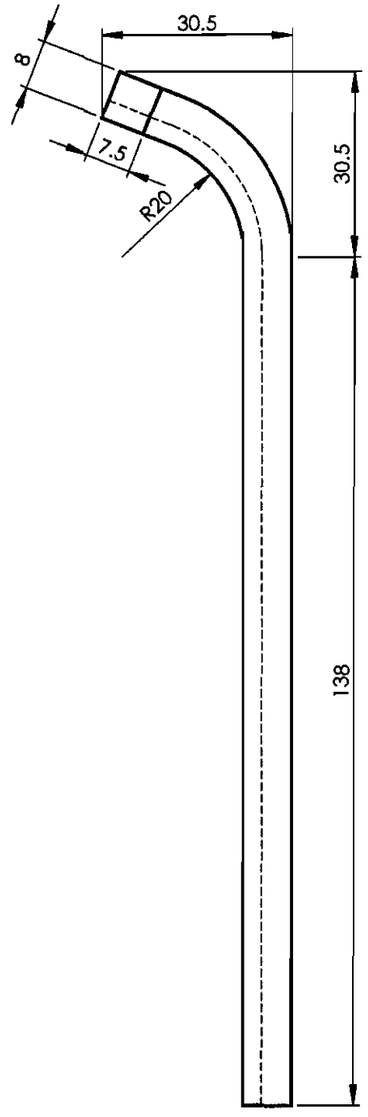

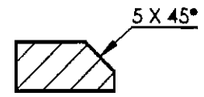

SECTION A-A

ALL DIMENSIONS ARE IN mm UNLESS OTHERWISE SPECIFIED. FOR UNTOLERANCED DIMENSIONS AND ROUGHNESS VALUES, REFER DRAWING NO ICF/STD-9-0-001.
ANY MANUAL ALTERATION SHALL AUTOMATICALLY RENDER THIS DRAWING INVALID. WELDING SYMBOLS ARE AS PER EN ISO 2553.
WEIGHT GIVEN IN DRAWING IS FOR INDICATIVE PURPOSE ONLY

NOTE:

1. ALL EDGE PREPARATION SHALL BE DONE BY MACHINING ONLY TO GRADE No. N10.
2. REMOVE ALL SHARP EDGES & BURRS.

QTY	DESCRIPTION	DIMENSIONS	ITEM NO.	REF. DRGS	MATL.SPEC.	WT/UNIT IN KGS	REMARKS
1	ANGLE	8x100x178	1		IRS M-41-97	1.06	

GROUP: 1-2 | SURFACE AREA IN Sq.m.: | WT/ASSY IN Kgs:

ANGLE

SCALE 1:1	SSE/D	
	CHD	
ALT. a	ALTD	MUTHU KUMARAN S
	DRN	MUTHU KUMARAN S

INDIAN RAILWAY STANDARDS
INTEGRAL COACH FACTORY, CHENNAI - 600038

SHEET 1 OF 1

AAB12144 | A3

REF.DRG.NO.	DATE OF LATEST ALT.	DATE OF FIRST ISSUE	AME/SME
	16-07-2024	05-06-2024	

AAB12145

▽ ROUGH MACHINED	(01) ROUGH CLEANED
▽▽ FINISH MACHINED	(01b) BURRS REMOVED
▽▽▽ FINE FINISH MACHINED	(18) CHAMFERED

REVISIONS

ALT.	ZONE	DESCRIPTION	APPROVED & DATE
a		DESIGN REVISED	

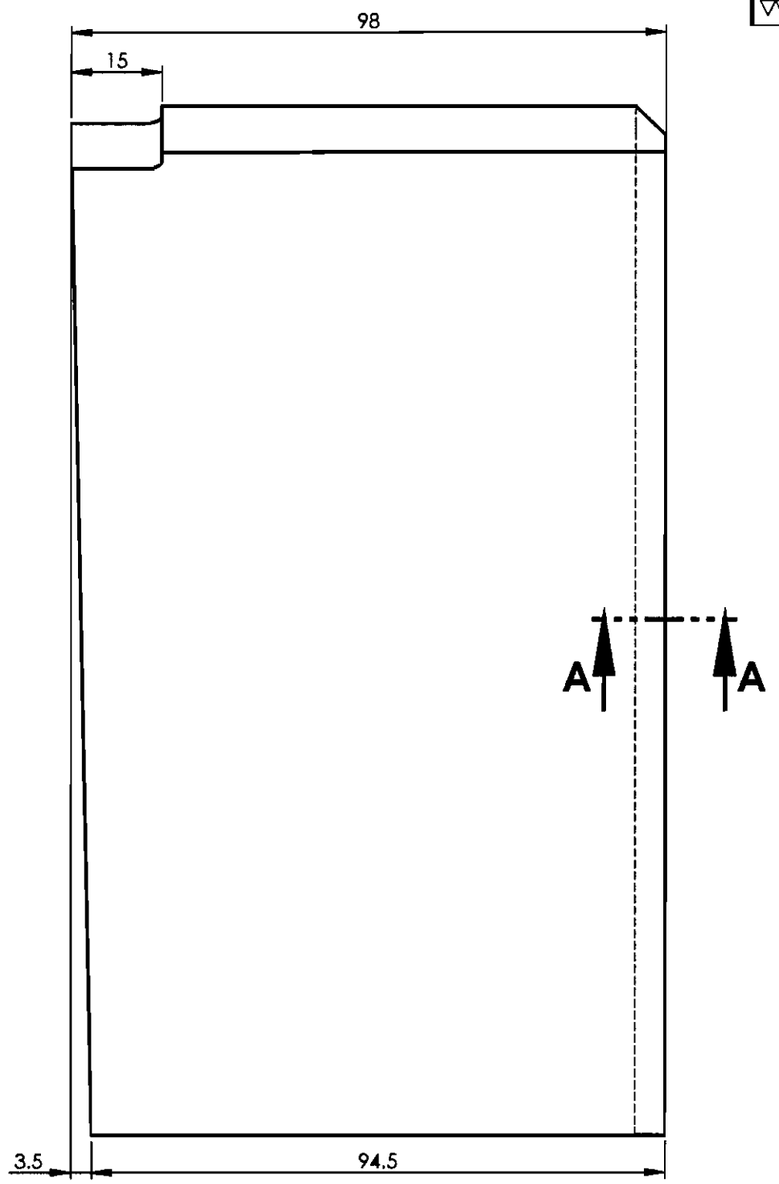

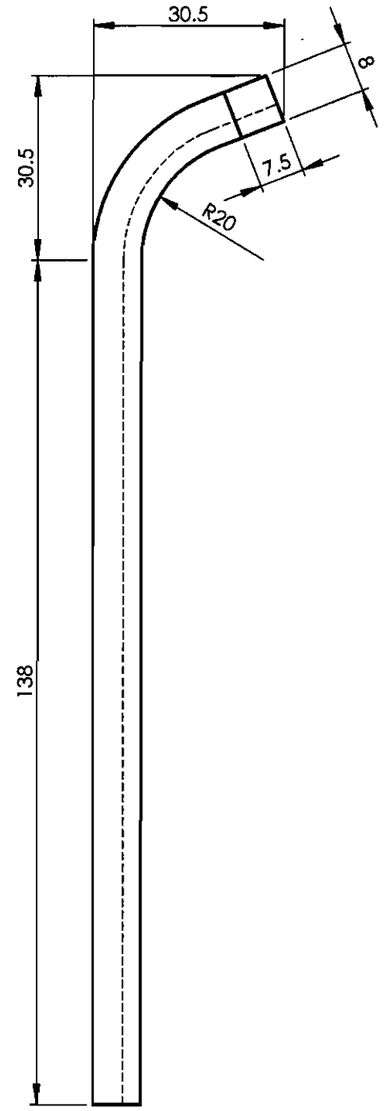

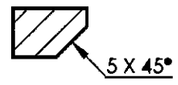

SECTION A-A
SCALE 1 : 1

ALL DIMENSIONS ARE IN mm UNLESS OTHERWISE SPECIFIED. FOR UNTOLERANCED DIMENSIONS AND ROUGHNESS VALUES, REFER DRAWING NO ICF/STD-9-0-001.
ANY MANUAL ALTERATION SHALL AUTOMATICALLY RENDER THIS DRAWING INVALID. WELDING SYMBOLS ARE AS PER EN ISO 2553.
WEIGHT GIVEN IN DRAWING IS FOR INDICATIVE PURPOSE ONLY

NOTE:

1. ALL EDGE PREPARATION SHALL BE DONE BY MACHINING ONLY TO GRADE No. N10.
2. REMOVE ALL SHARP EDGES & BURRS.

QTY	DESCRIPTION	DIMENSIONS	ITEM NO.	REF. DRGS	MATL.SPEC.	WT/UNIT IN KGS	REMARKS
1	ANGLE	8x100x178	1		IRS M-41-97	1.06	

GROUP: 1-2 Head Stock | SURFACE AREA IN Sq.m.: | WT/ASSY IN Kgs:

ANGLE

SCALE 1:2	SSE/D	
	CHD	
ALT. a	ALTD	MUTHU KUMARAN S
	DRN	MUTHU KUMARAN S

INDIAN RAILWAY STANDARDS
INTEGRAL COACH FACTORY, CHENNAI - 600038

SHEET 1 OF 1

AAB12145 | A3

16-07-2024	05-06-2024	
DATE OF LATEST ALT.	DATE OF FIRST ISSUE	AME/SME

REF.DRG.NO.

AAB12146

▽ ROUGH MACHINED	(01) ROUGH CLEANED
▽▽ FINISH MACHINED	(01b) BURRS REMOVED
▽▽▽ FINE FINISH MACHINED	(18) CHAMFERED

REVISIONS			
ALT.	ZONE	DESCRIPTION	APPROVED & DATE
a		DESIGN REVISED.	

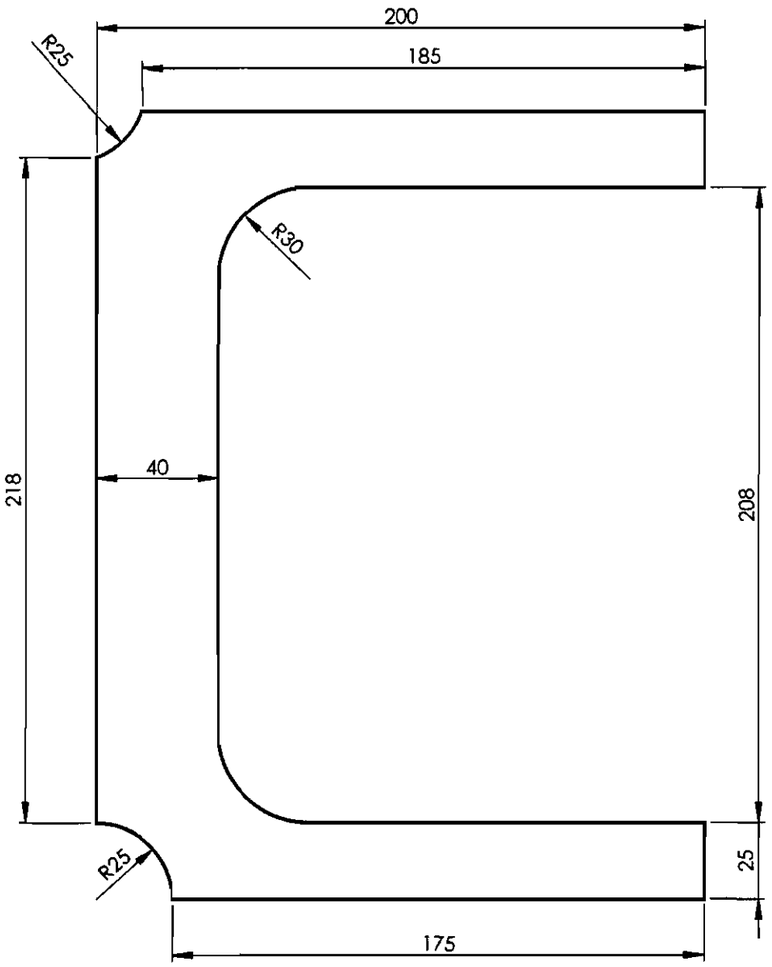

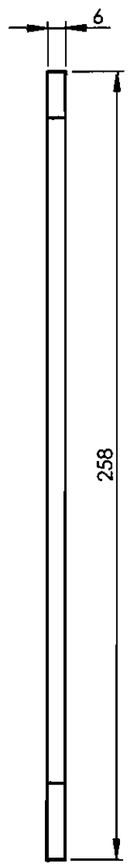

ALL DIMENSIONS ARE IN mm UNLESS OTHERWISE SPECIFIED. FOR UNTOLERANCED DIMENSIONS AND ROUGHNESS VALUES, REFER DRAWING NO ICF/STD-9-0-001.
ANY MANUAL ALTERATION SHALL AUTOMATICALLY RENDER THIS DRAWING INVALID. WELDING SYMBOLS ARE AS PER EN ISO 2553.
WEIGHT GIVEN IN DRAWING IS FOR INDICATIVE PURPOSE ONLY

NOTE:

1. ALL EDGE PREPARATION SHALL BE DONE BY MACHINING ONLY TO GRADE No. N10.
2. REMOVE ALL SHARP EDGES & BURRS.

QTY	DESCRIPTION	DIMENSIONS	ITEM NO.	REF. DRGS	MATL.SPEC.	WT/UNIT IN KGS	REMARKS
1	PLATE	6x200x258	1		IRS M-41-97	0.85	

GROUP: 1-2 | SURFACE AREA IN Sq.m.: | WT/ASSY IN Kgs:

PLATE

SCALE		
1:2	SSE/D	
	CHD	
ALT. a	ALTD	MUTHU KUMARAN S
	DRN	MUTHU KUMARAN S

INDIAN RAILWAY STANDARDS
INTEGRAL COACH FACTORY, CHENNAI - 600038

SHEET 1 OF 1

AAB12146 | A3

REF.DRG.NO.

16-07-2024	05-06-2024	
DATE OF LATEST ALT.	DATE OF FIRST ISSUE	AME/SME

AAB12150

▽ ROUGH MACHINED	(01) ROUGH CLEANED
▽▽ FINISH MACHINED	(01b) BURRS REMOVED
▽▽▽ FINE FINISH MACHINED	(18) CHAMFERED

REVISIONS			
ALT.	ZONE	DESCRIPTION	APPROVED & DATE
a		DESIGN REVISED	

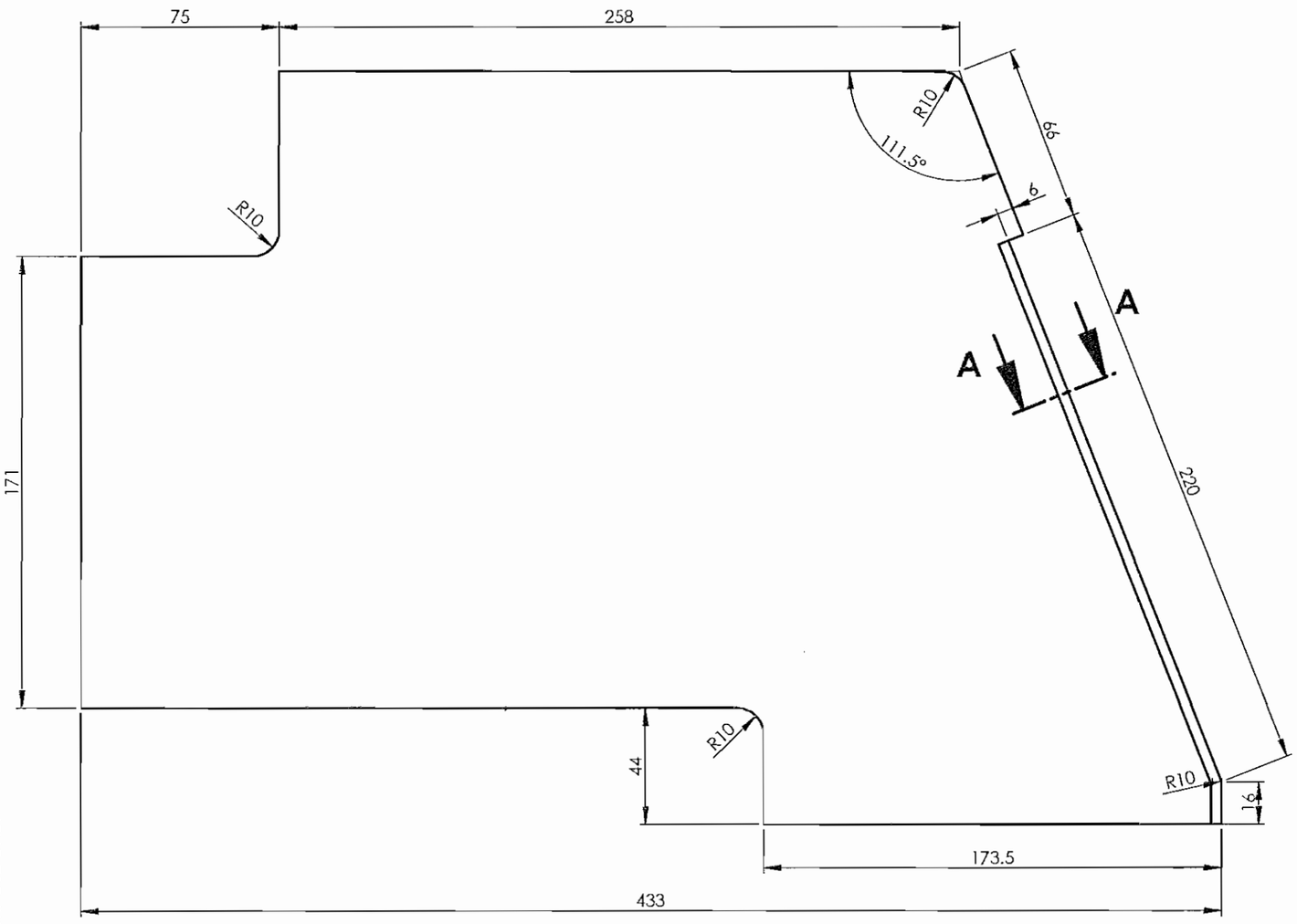

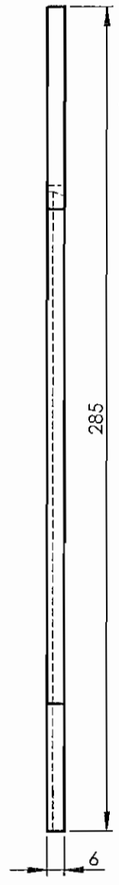



SECTION A-A
SCALE 1 : 1

ALL DIMENSIONS ARE IN mm UNLESS OTHERWISE SPECIFIED. FOR UNTOLERANCED DIMENSIONS AND ROUGHNESS VALUES, REFER DRAWING NO ICF/STD-9-0-001.
ANY MANUAL ALTERATION SHALL AUTOMATICALLY RENDER THIS DRAWING INVALID. WELDING SYMBOLS ARE AS PER EN ISO 2553.
WEIGHT GIVEN IN DRAWING IS FOR INDICATIVE PURPOSE ONLY

NOTE:

1. ALL EDGE PREPARATION SHALL BE DONE BY MACHINING ONLY TO GRADE No. N10.
2. REMOVE ALL SHARP EDGES & BURRS.

QTY	DESCRIPTION	DIMENSIONS	ITEM NO.	REF. DRGS	MATL.SPEC.	WT/UNIT IN KGS	REMARKS
1	PLATE	6x285x433	1		IRS M-41-97	4.36	

GROUP: I-2 | SURFACE AREA IN Sq.m.: | WT/ASSY IN Kgs:

PLATE

SCALE 1:2	SSE/D	
	CHD	
ALT. a	ALTD	MUTHU KUMARAN S
	DRN	MUTHU KUMARAN S

INDIAN RAILWAY STANDARDS
INTEGRAL COACH FACTORY, CHENNAI - 600038

SHEET 1 OF 1

AAB12150 | A3

REF.DRG.NO.	DATE OF LATEST ALT.	DATE OF FIRST ISSUE	AME/SME
	10-12-2025	28-06-2024	

AAB12151

▽ ROUGH MACHINED	(01) ROUGH CLEANED
▽▽ FINISH MACHINED	(01b) BURRS REMOVED
▽▽▽ FINE FINISH MACHINED	(18) CHAMFERED

REVISIONS			
ALT.	ZONE	DESCRIPTION	APPROVED & DATE
a		DESIGN REVISED	

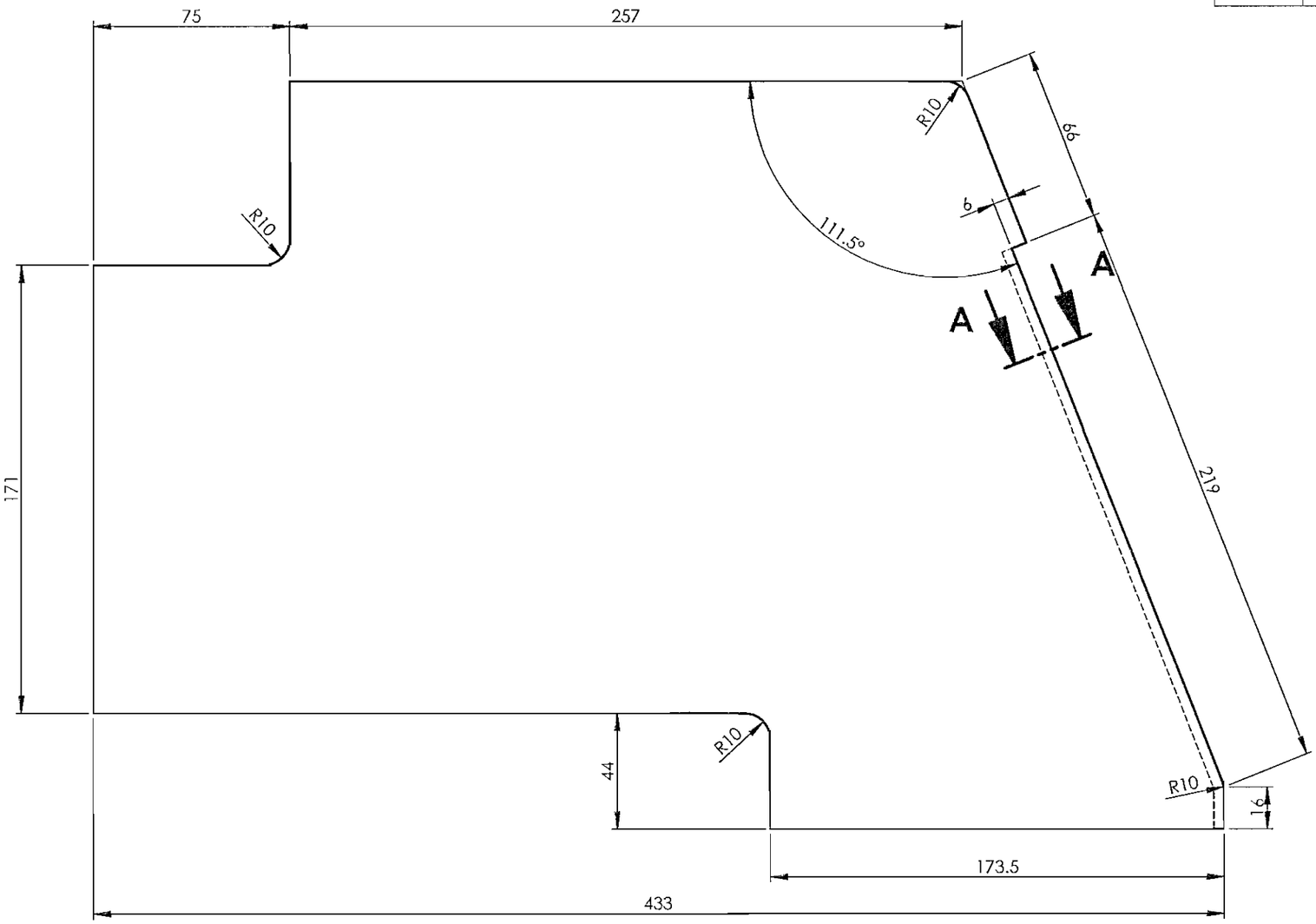

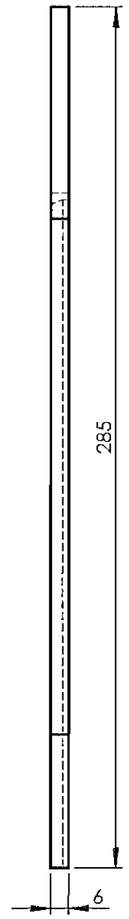

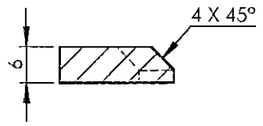

SECTION A-A
SCALE 1 : 1

ALL DIMENSIONS ARE IN mm UNLESS OTHERWISE SPECIFIED. FOR UNTOLERANCED DIMENSIONS AND ROUGHNESS VALUES, REFER DRAWING NO ICF/STD-9-0-001.
ANY MANUAL ALTERATION SHALL AUTOMATICALLY RENDER THIS DRAWING INVALID. WELDING SYMBOLS ARE AS PER EN ISO 2553.
WEIGHT GIVEN IN DRAWING IS FOR INDICATIVE PURPOSE ONLY

NOTE:

1. ALL EDGE PREPARATION SHALL BE DONE BY MACHINING ONLY TO GRADE No. N10.
2. REMOVE ALL SHARP EDGES & BURRS.

QTY	DESCRIPTION	DIMENSIONS	ITEM NO.	REF. DRGS	MATL.SPEC.	WT/UNIT IN KGS	REMARKS
1	PLATE	6x285x433	1		IRS M-41-97	4.36	

GROUP: 1-2 | SURFACE AREA IN Sq.m.: | WT/ASSY IN Kgs:

PLATE

SCALE		
1:2	SSE/D	
	CHD	
ALT. a	ALTD	MUTHU KUMARAN S
	DRN	MUTHU KUMARAN S

INDIAN RAILWAY STANDARDS
INTEGRAL COACH FACTORY, CHENNAI - 600038

SHEET 1 OF 1

AAB12151 A3

DATE OF LATEST ALT.	DATE OF FIRST ISSUE	AME/SME
10-12-2025	28-06-2024	

REF.DRG.NO.

AAB12152

▽ ROUGH MACHINED	(01) ROUGH CLEANED
▽▽ FINISH MACHINED	(01b) BURRS REMOVED
▽▽▽ FINE FINISH MACHINED	(18) CHAMFERED

REVISIONS

ALT.	ZONE	DESCRIPTION	APPROVED & DATE
a		DESIGN REVISED	

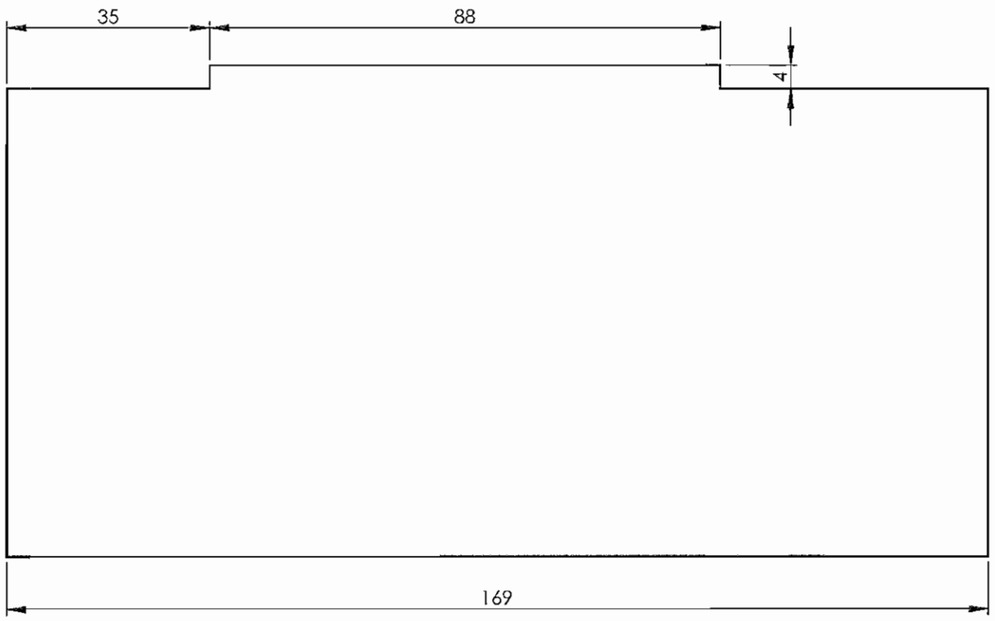

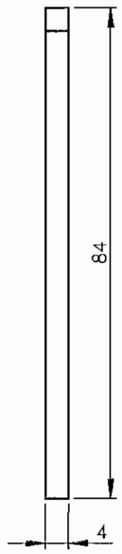

ALL DIMENSIONS ARE IN mm UNLESS OTHERWISE SPECIFIED. FOR UNTOLERANCED DIMENSIONS AND ROUGHNESS VALUES, REFER DRAWING NO ICF/STD-9-0-001.
ANY MANUAL ALTERATION SHALL AUTOMATICALLY RENDER THIS DRAWING INVALID. WELDING SYMBOLS ARE AS PER EN ISO 2553.
WEIGHT GIVEN IN DRAWING IS FOR INDICATIVE PURPOSE ONLY

NOTE:

1. ALL EDGE PREPARATION SHALL BE DONE BY MACHINING ONLY TO GRADE No. N10.
2. REMOVE ALL SHARP EDGES & BURRS.

QTY	DESCRIPTION	DIMENSIONS	ITEM NO.	REF. DRGS	MATL.SPEC.	WT/UNIT IN KGS	REMARKS
1	RIB	4x84x169	1		IRS M-41-97	0.44	

GROUP: 1-2 | SURFACE AREA IN Sq.m.: | WT/ASSY IN Kgs:

RIB

SCALE 1:1	SSE/D	
	CHD	
ALT. a	ALTD	MUTHU KUMARAN S
	DRN	MUTHU KUMARAN S

DATE OF LATEST ALT.	DATE OF FIRST ISSUE	AME/SME
09-12-2025	28-06-2024	

REF.DRG.NO.

INDIAN RAILWAY STANDARDS
INTEGRAL COACH FACTORY, CHENNAI - 600038

SHEET 1 OF 1

AAB12152 A3

AAB12153

▽ ROUGH MACHINED	(01) ROUGH CLEANED
▽▽ FINISH MACHINED	(01b) BURRS REMOVED
▽▽▽ FINE FINISH MACHINED	(18) CHAMFERED

REVISIONS			
ALT.	ZONE	DESCRIPTION	APPROVED & DATE

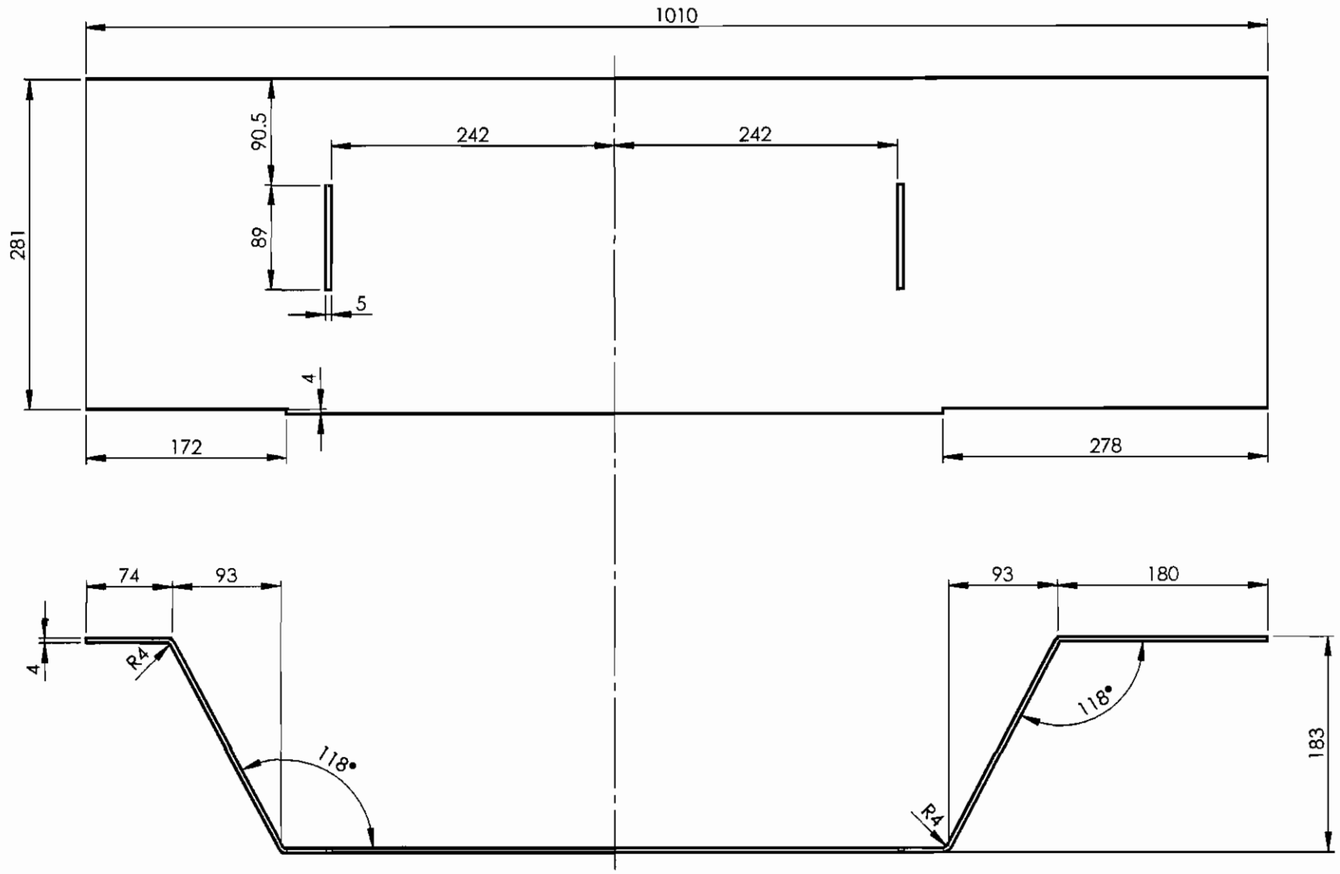

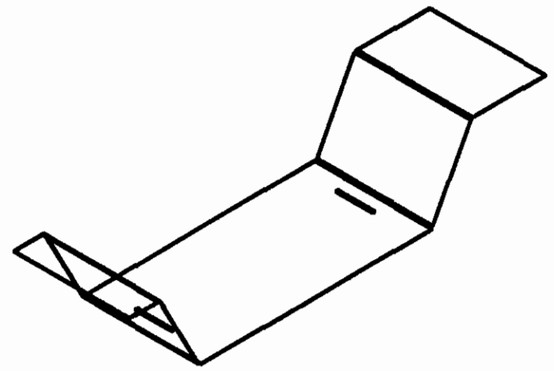

ALL DIMENSIONS ARE IN mm UNLESS OTHERWISE SPECIFIED. FOR UNTOLERANCED DIMENSIONS AND ROUGHNESS VALUES, REFER DRAWING NO ICF/STD-9-0-001.
ANY MANUAL ALTERATION SHALL AUTOMATICALLY RENDER THIS DRAWING INVALID. WELDING SYMBOLS ARE AS PER EN ISO 2553.
WEIGHT GIVEN IN DRAWING IS FOR INDICATIVE PURPOSE ONLY

NOTE:

1. ALL EDGE PREPARATION SHALL BE DONE BY MACHINING ONLY TO GRADE No. N10.
2. REMOVE ALL SHARP EDGES & BURRS.

QTY	DESCRIPTION	DIMENSIONS	ITEM NO.	REF. DRGS	MATL.SPEC.	WT/UNIT IN KGS	REMARKS
1	DOORWAY VERTICAL PLATE	4x285x1225	1		RDSO SPEC C-K201 X2 Cr Ni N 18 7	11.03	

GROUP: | SURFACE AREA IN Sq.m.: | WT/ASSY IN Kgs:

DOORWAY VERTICAL PLATE

SCALE 1:10	SSE/D	
	CHD	
ALT. -	ALTD	
	DRN	MUTHU KUMARAN S

INDIAN RAILWAY STANDARDS
INTEGRAL COACH FACTORY, CHENNAI - 600038

SHEET 1 OF 1

AAB12153 A3

DATE OF LATEST ALT.	DATE OF FIRST ISSUE	AME/SME
	28-06-2024	

REF.DRG.NO.

AAB12154

▽ ROUGH MACHINED	(01) ROUGH CLEANED
▽▽ FINISH MACHINED	(01b) BURRS REMOVED
▽▽▽ FINE FINISH MACHINED	(18) CHAMFERED

REVISIONS			
ALT.	ZONE	DESCRIPTION	APPROVED & DATE

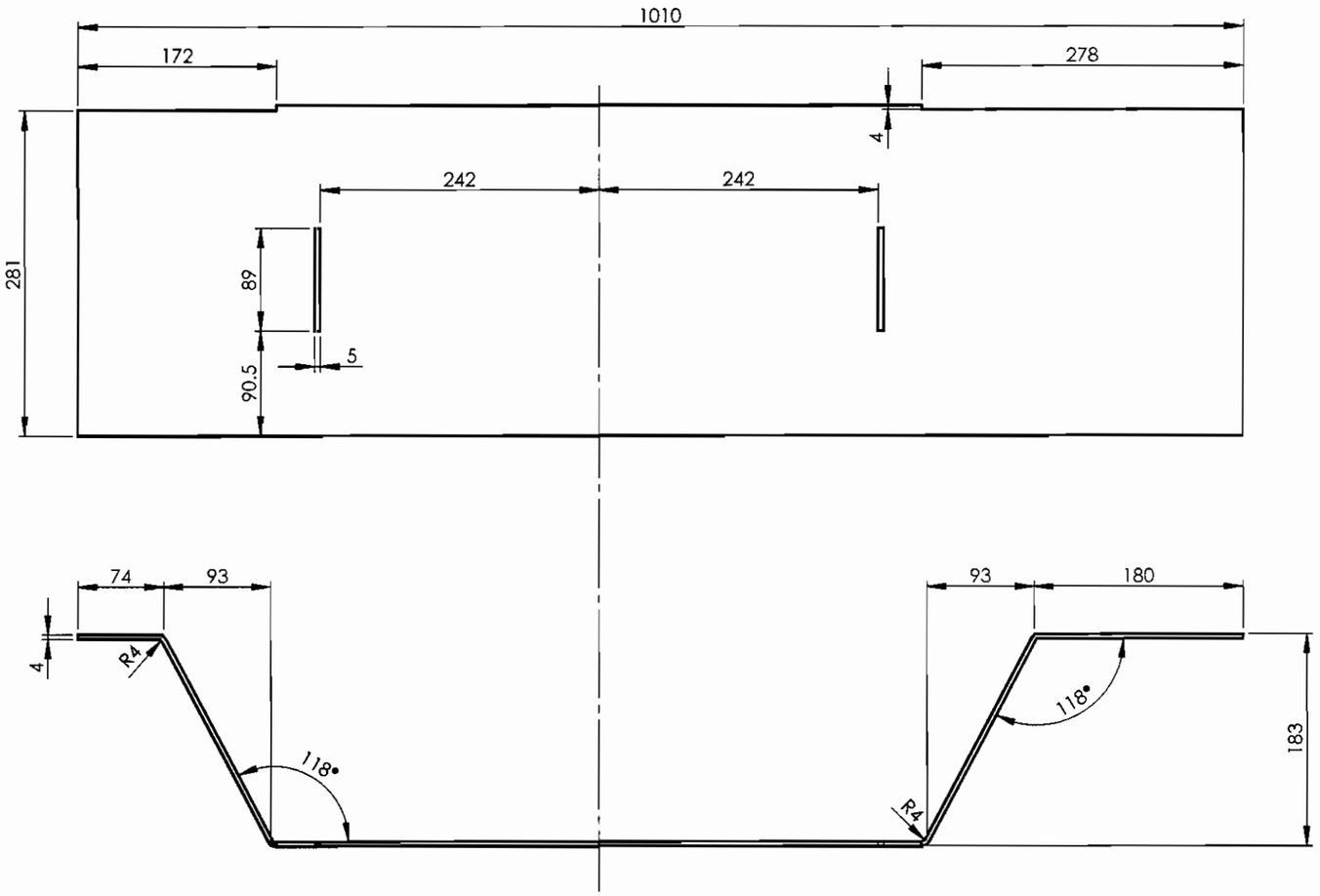

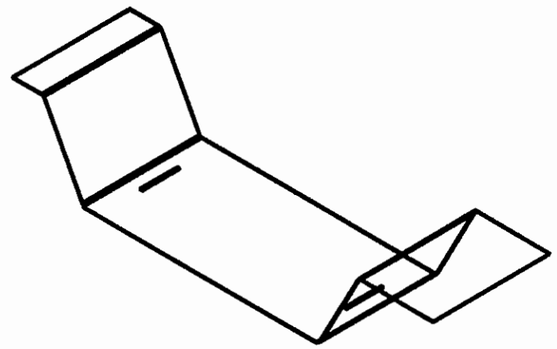

ALL DIMENSIONS ARE IN mm UNLESS OTHERWISE SPECIFIED. FOR UNTOLERANCED DIMENSIONS AND ROUGHNESS VALUES, REFER DRAWING NO ICF/STD-9-0-0001.
ANY MANUAL ALTERATION SHALL AUTOMATICALLY RENDER THIS DRAWING INVALID. WELDING SYMBOLS ARE AS PER EN ISO 2553.
WEIGHT GIVEN IN DRAWING IS FOR INDICATIVE PURPOSE ONLY

NOTE:

1. ALL EDGE PREPARATION SHALL BE DONE BY MACHINING ONLY TO GRADE No. N10.
2. REMOVE ALL SHARP EDGES & BURRS.

QTY	DESCRIPTION	DIMENSIONS	ITEM NO.	REF. DRGS	MATL.SPEC.	WT/UNIT IN KGS	REMARKS
1	DOORWAY VERTICAL PLATE	4x285x1225	1		RDSO SPEC C-K201 X2 Cr Ni N 18 7	11.03	

GROUP: | SURFACE AREA IN Sq.m.: | WT/ASSY IN Kgs:

DOORWAY VERTICAL PLATE

SCALE 1:10	SSE/D	
	CHD	
ALT. -	ALTD	
	DRN	MUTHU KUMARAN S

INDIAN RAILWAY STANDARDS
INTEGRAL COACH FACTORY, CHENNAI - 600038

SHEET 1 OF 1

AAB12154 A3

REF.DRG.NO.	DATE OF LATEST ALT.	DATE OF FIRST ISSUE	AME/SME
		28-06-2024	

AAB12155

▽ ROUGH MACHINED	(01) ROUGH CLEANED
▽▽ FINISH MACHINED	(01b) BURRS REMOVED
▽▽▽ FINE FINISH MACHINED	(18) CHAMFERED

REVISIONS			
ALT.	ZONE	DESCRIPTION	APPROVED & DATE
a		DESIGN REVISED	

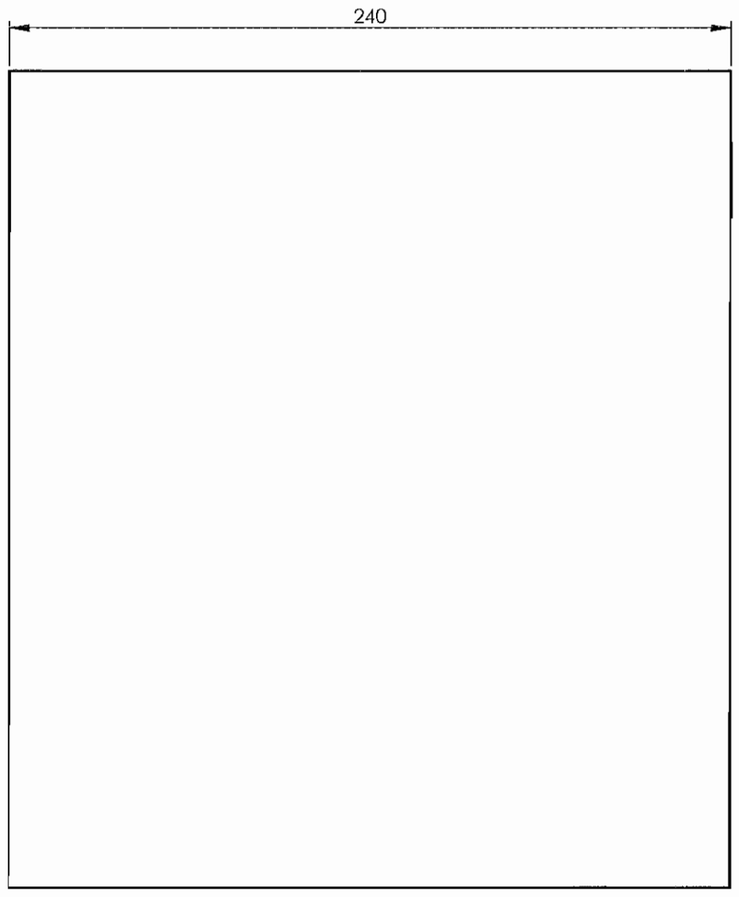

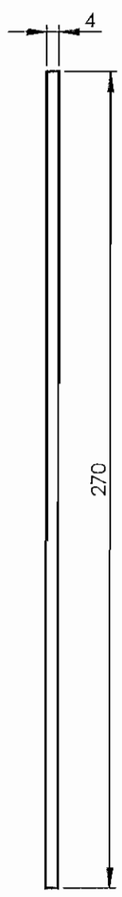

ALL DIMENSIONS ARE IN mm UNLESS OTHERWISE SPECIFIED. FOR UNTOLERANCED DIMENSIONS AND ROUGHNESS VALUES, REFER DRAWING NO ICF/STD-9-0-001.
ANY MANUAL ALTERATION SHALL AUTOMATICALLY RENDER THIS DRAWING INVALID. WELDING SYMBOLS ARE AS PER EN ISO 2553.
WEIGHT GIVEN IN DRAWING IS FOR INDICATIVE PURPOSE ONLY

NOTE:

1. ALL EDGE PREPARATION SHALL BE DONE BY MACHINING ONLY TO GRADE No. N10.
2. REMOVE ALL SHARP EDGES & BURRS.

QTY	DESCRIPTION	DIMENSIONS	ITEM NO.	REF. DRGS	MATL.SPEC.	WT/UNIT IN KGS	REMARKS
1	PLATE	4x240x270	1		IRS M-41-97	2.03	

GROUP: 1-2 | SURFACE AREA IN Sq.m.: | WT/ASSY IN Kgs:

PLATE

SCALE	SSE/D	
1:2	CHD	
ALT. a	ALTD	MUTHU KUMARAN S
	DRN	MUTHU KUMARAN S

INDIAN RAILWAY STANDARDS
INTEGRAL COACH FACTORY, CHENNAI - 600038

SHEET 1 OF 1

AAB12155 | A3

10-12-2025	28-06-2024	
DATE OF LATEST ALT.	DATE OF FIRST ISSUE	AME/SME

REF.DRG.NO.

AAB12156

▽ ROUGH MACHINED	(01) ROUGH CLEANED
▽▽ FINISH MACHINED	(01b) BURRS REMOVED
▽▽▽ FINE FINISH MACHINED	(18) CHAMFERED

REVISIONS			
ALT.	ZONE	DESCRIPTION	APPROVED & DATE
a		DESIGN REVISED	

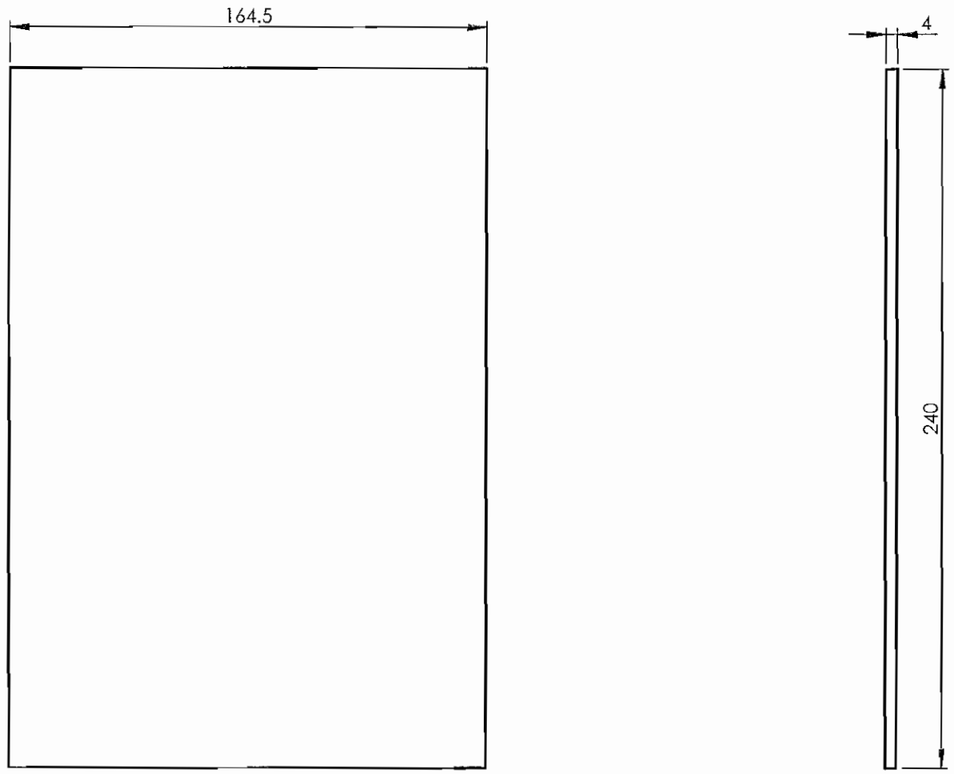

ALL DIMENSIONS ARE IN mm UNLESS OTHERWISE SPECIFIED. FOR UNTOLERANCED DIMENSIONS AND ROUGHNESS VALUES, REFER DRAWING NO ICF/STD-9-0-001.
ANY MANUAL ALTERATION SHALL AUTOMATICALLY RENDER THIS DRAWING INVALID. WELDING SYMBOLS ARE AS PER EN ISO 2553.
WEIGHT GIVEN IN DRAWING IS FOR INDICATIVE PURPOSE ONLY

NOTE:

1. ALL EDGE PREPARATION SHALL BE DONE BY MACHINING ONLY TO GRADE No. N10.
2. REMOVE ALL SHARP EDGES & BURRS.

QTY	DESCRIPTION	DIMENSIONS	ITEM NO.	REF. DRGS	MATL.SPEC.	WT/UNIT IN KGS	REMARKS
1	PLATE	4x164.5x240	1		IRS M-41-97	1.24	

GROUP: 1-2 | SURFACE AREA IN Sq.m.: | WT/ASSY IN Kgs:

PLATE

SCALE		
1:2	SSE/D	
	CHD	
ALT. a	ALTD	MUTHU KUMARAN S
	DRN	MUTHU KUMARAN S

INDIAN RAILWAY STANDARDS
INTEGRAL COACH FACTORY, CHENNAI - 600038

SHEET 1 OF 1

AAB12156 A3

REF.DRG.NO.	DATE OF LATEST ALT.	DATE OF FIRST ISSUE	AME/SME
	10-12-2025	28-06-2024	

AAB12157

▽ ROUGH MACHINED	(01) ROUGH CLEANED
▽▽ FINISH MACHINED	(01b) BURRS REMOVED
▽▽▽ FINE FINISH MACHINED	(18) CHAMFERED

REVISIONS			
ALT.	ZONE	DESCRIPTION	APPROVED & DATE

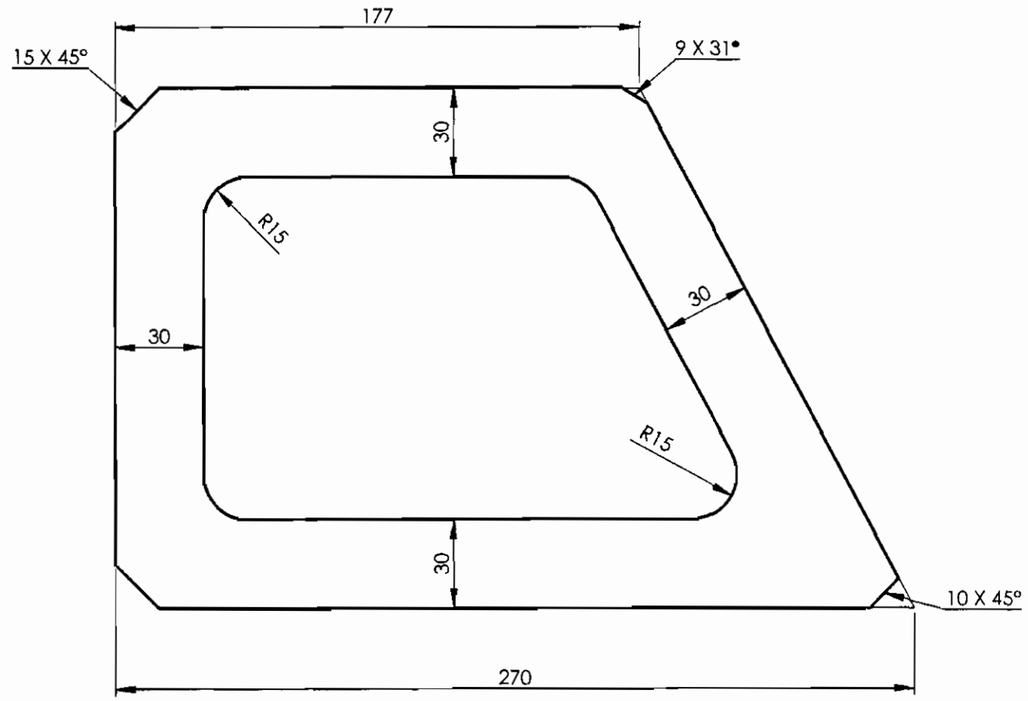

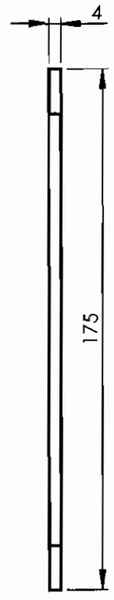

ALL DIMENSIONS ARE IN mm UNLESS OTHERWISE SPECIFIED. FOR UNTOLERANCED DIMENSIONS AND ROUGHNESS VALUES, REFER DRAWING NO ICF/STD-9-0-001.
ANY MANUAL ALTERATION SHALL AUTOMATICALLY RENDER THIS DRAWING INVALID. WELDING SYMBOLS ARE AS PER EN ISO 2553.
WEIGHT GIVEN IN DRAWING IS FOR INDICATIVE PURPOSE ONLY

NOTE:

1. ALL EDGE PREPARATION SHALL BE DONE BY MACHINING ONLY TO GRADE No. N10.
2. REMOVE ALL SHARP EDGES & BURRS.

QTY	DESCRIPTION	DIMENSIONS	ITEM NO.	REF. DRGS	MATL.SPEC.	WT/UNIT IN KGS	REMARKS
1	RIB	4x175x270	1		IRS M-41-97	0.65	

GROUP: | SURFACE AREA IN Sq.m.: | WT/ASSY IN Kgs:

RIB

SCALE 1:2	SSE/D	
	CHD	
ALT. -	ALTD	
	DRN	S MUTHUKUMARAN

REF.DRG.NO.

	28-06-2024	
DATE OF LATEST ALT.	DATE OF FIRST ISSUE	AME/SME

INDIAN RAILWAY STANDARDS
INTEGRAL COACH FACTORY, CHENNAI - 600038

SHEET 1 OF 1

AAB12157 A3

AAB12158

▽ ROUGH MACHINED	(01) ROUGH CLEANED
▽▽ FINISH MACHINED	(01b) BURRS REMOVED
▽▽▽ FINE FINISH MACHINED	(18) CHAMFERED

REVISIONS			
ALT.	ZONE	DESCRIPTION	APPROVED & DATE

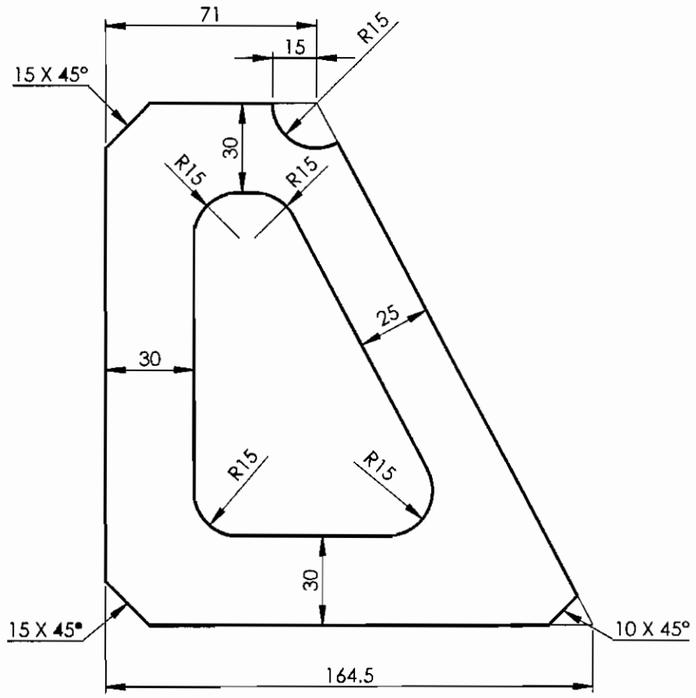

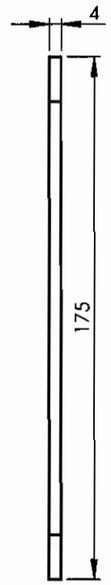

ALL DIMENSIONS ARE IN mm UNLESS OTHERWISE SPECIFIED. FOR UNTOLERANCED DIMENSIONS AND ROUGHNESS VALUES, REFER DRAWING NO ICF/STD-9-0-001.
ANY MANUAL ALTERATION SHALL AUTOMATICALLY RENDER THIS DRAWING INVALID. WELDING SYMBOLS ARE AS PER EN ISO 2553.
WEIGHT GIVEN IN DRAWING IS FOR INDICATIVE PURPOSE ONLY

NOTE:

1. ALL EDGE PREPARATION SHALL BE DONE BY MACHINING ONLY TO GRADE No. N10.
2. REMOVE ALL SHARP EDGES & BURRS.

QTY	DESCRIPTION	DIMENSIONS	ITEM NO.	REF. DRGS	MATL.SPEC.	WT/UNIT IN KGS	REMARKS
1	RIB	4x164.5x175	1		IRS M-41-97	0.42	

GROUP: | SURFACE AREA IN Sq.m.: | WT/ASSY IN Kgs:

RIB

SCALE 1:2	SSE/D	
	CHD	
ALT. -	ALTD	
	DRN	MUTHU KUMARAN S

REF.DRG.NO.

DATE OF LATEST ALT.	DATE OF FIRST ISSUE	AME/SME
	28-06-2024	

INDIAN RAILWAY STANDARDS
INTEGRAL COACH FACTORY, CHENNAI - 600038

SHEET 1 OF 1

AAB12158 A3

AAB12159

▽ ROUGH MACHINED	(01) ROUGH CLEANED
▽▽ FINISH MACHINED	(01b) BURRS REMOVED
▽▽▽ FINE FINISH MACHINED	(18) CHAMFERED

REVISIONS			
ALT.	ZONE	DESCRIPTION	APPROVED & DATE

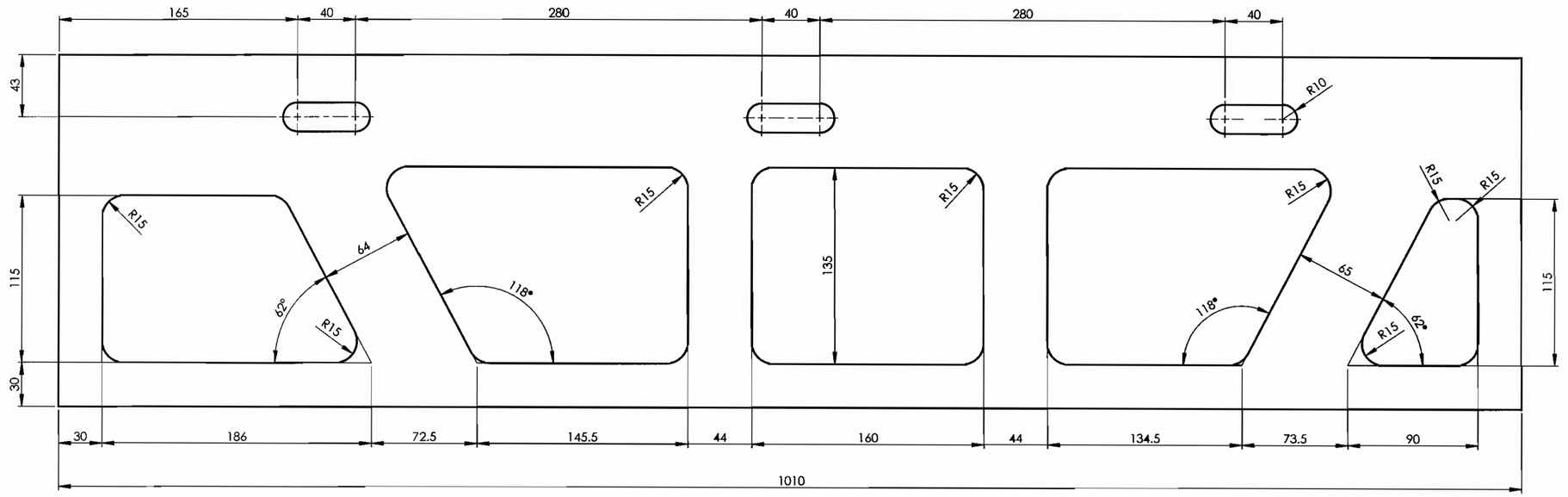

ALL DIMENSIONS ARE IN mm UNLESS OTHERWISE SPECIFIED. FOR UNTOLERANCED DIMENSIONS AND ROUGHNESS VALUES, REFER DRAWING NO ICF/STD-9-0-001.
ANY MANUAL ALTERATION SHALL AUTOMATICALLY RENDER THIS DRAWING INVALID. WELDING SYMBOLS ARE AS PER EN ISO 2553. WEIGHT GIVEN IN DRAWING IS FOR INDICATIVE PURPOSE ONLY

NOTE:

1. ALL EDGE PREPARATION SHALL BE DONE BY MACHINING ONLY TO GRADE No. N10.
2. REMOVE ALL SHARP EDGES & BURRS.

QTY	DESCRIPTION	DIMENSIONS	ITEM NO.	REF. DRGS	MATL.SPEC.	WT/UNIT IN KGS	REMARKS
1	DOORWAY BOTTOM PLATE	4x242x1010	1		SS-304	4.69	

GROUP: | SURFACE AREA IN Sq.m.: | WT/ASSY IN Kgs:

DOORWAY BOTTOM PLATE

SCALE 1:5	SSE/D	
	CHD	
ALT -	ALTD	
	DRN	MUTHU KUMARAN S

INDIAN RAILWAY STANDARDS
INTEGRAL COACH FACTORY, CHENNAI - 600038

SHEET 1 OF 1

AAB12159 A2

DATE OF LATEST ALT.	DATE OF FIRST ISSUE	AME/SME
	12-07-2024	

REF.DRG.NO.

AAB12160

▽ ROUGH MACHINED	(01) ROUGH CLEANED
▽▽ FINISH MACHINED	(01a) BURRS REMOVED
▽▽▽ FINE FINISH MACHINED	(18) CHAMFERED

REVISIONS			
ALT.	ZONE	DESCRIPTION	APPROVED & DATE
a		6 no's 5mm TAPPED HOLES DELETED	

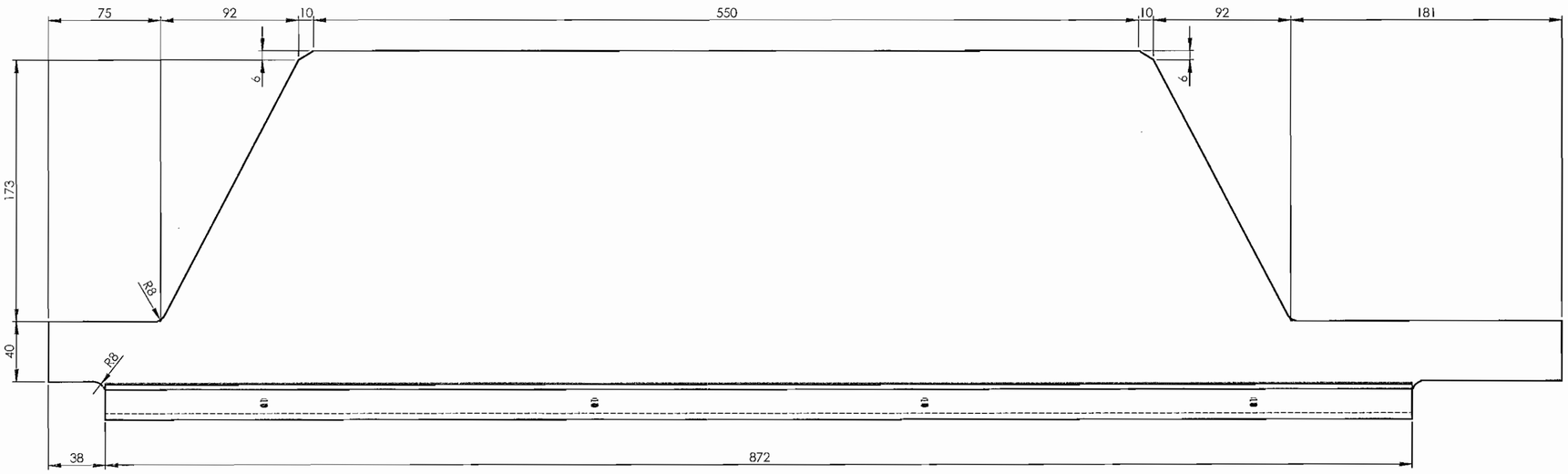

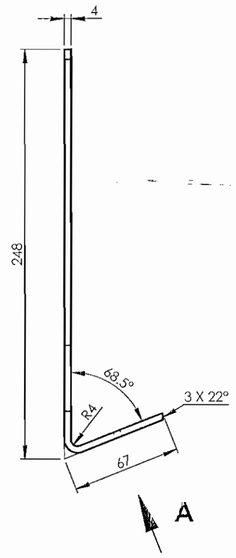

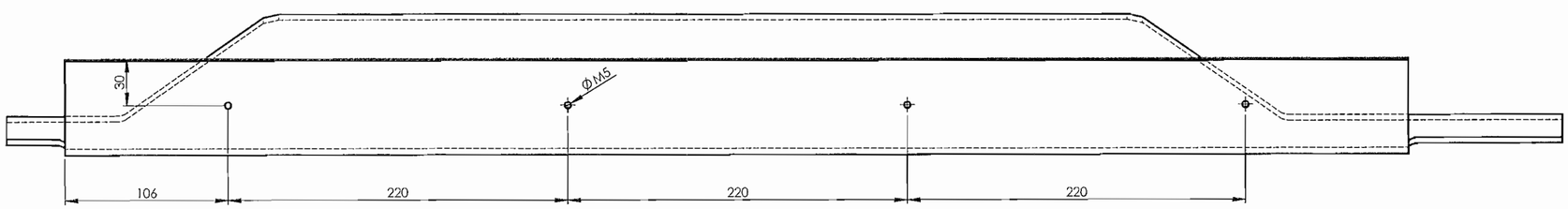

VIEW A
69°

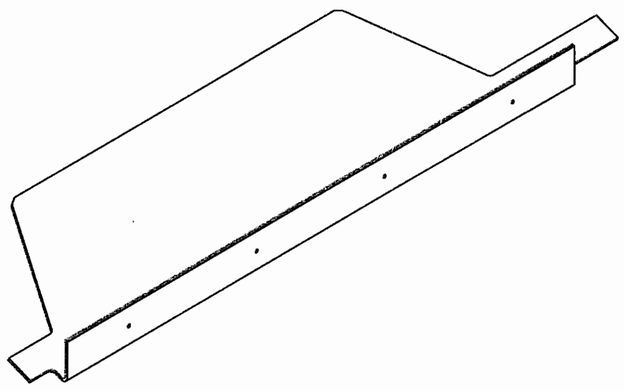

REF.DRG.NO.

ALL DIMENSIONS ARE IN mm UNLESS OTHERWISE SPECIFIED. FOR UNTOLERANCED DIMENSIONS AND ROUGHNESS VALUES, REFER DRAWING NO ICF/STD-9-0-001.
ANY MANUAL ALTERATION SHALL AUTOMATICALLY RENDER THIS DRAWING INVALID. WELDING SYMBOLS ARE AS PER EN ISO 2553. WEIGHT GIVEN IN DRAWING IS FOR INDICATIVE PURPOSE ONLY

NOTE:

1. ALL EDGE PREPARATION SHALL BE DONE BY MACHINING ONLY TO GRADE No. N10.
2. REMOVE ALL SHARP EDGES & BURRS.

QTY	DESCRIPTION	DIMENSIONS	ITEM NO.	REF. DRGS	MATL.SPEC.	WT/UNIT IN KGS	REMARKS
1	FOOT STEP PLATE	4x307x1010	1		RDSO SPEC C-K201 X2 Cr Ni N 18 7	7.36	

GROUP: 1-2 | SURFACE AREA IN Sq.m.: | WT/ASSY IN Kgs:

FOOT STEP PLATE

SCALE 1:2.5	SSE/D	
	CHD	
ALT a	ALTD	MUTHU KUMARAN S
	DRN	MUTHU KUMARAN S

10-12-2025	28-06-2024	
DATE OF LATEST ALT.	DATE OF FIRST ISSUE	AME/SME

INDIAN RAILWAY STANDARDS
INTEGRAL COACH FACTORY, CHENNAI - 600038

SHEET 1 OF 1

AAB12160 A2

AAB12161

▽ ROUGH MACHINED	(01) ROUGH CLEANED
▽▽ FINISH MACHINED	(01a) BURRS REMOVED
▽▽▽ FINE FINISH MACHINED	(18) CHAMFERED

REVISIONS			
ALT.	ZONE	DESCRIPTION	APPROVED & DATE
a		6no's 5mm TAPPED HOLES DELETED	

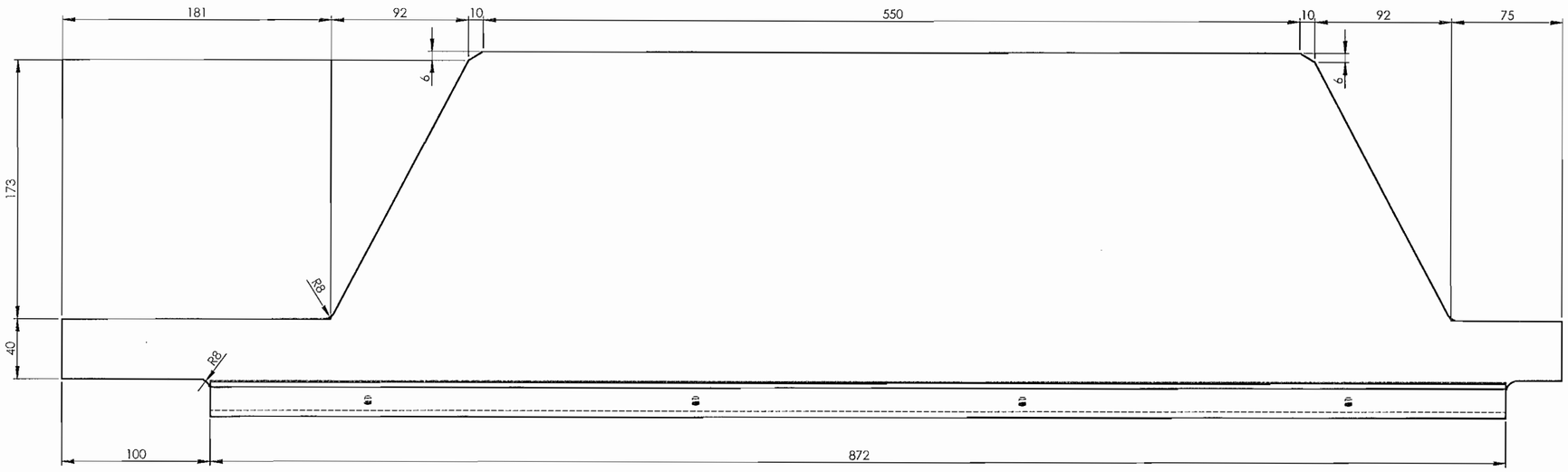

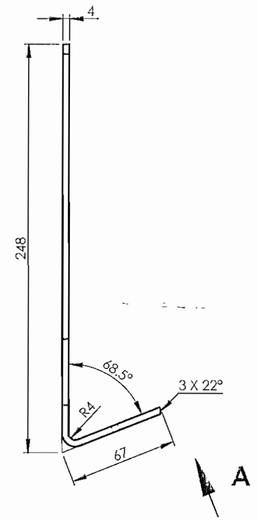

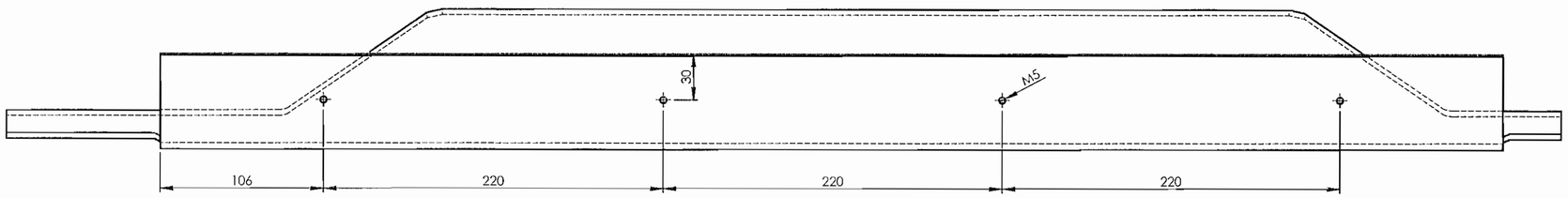

VIEW A
69°

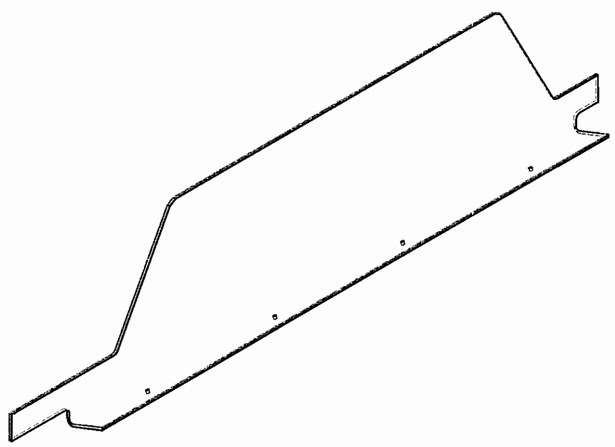

ALL DIMENSIONS ARE IN mm UNLESS OTHERWISE SPECIFIED. FOR UNTOLERANCED DIMENSIONS AND ROUGHNESS VALUES, REFER DRAWING NO ICF/STD-9-0-001.
ANY MANUAL ALTERATION SHALL AUTOMATICALLY RENDER THIS DRAWING INVALID. WELDING SYMBOLS ARE AS PER EN ISO 2553. WEIGHT GIVEN IN DRAWING IS FOR INDICATIVE PURPOSE ONLY

REF.DRG.NO.

NOTE:

1. ALL EDGE PREPARATION SHALL BE DONE BY MACHINING ONLY TO GRADE No. N10.
2. REMOVE ALL SHARP EDGES & BURRS.

QTY	DESCRIPTION	DIMENSIONS	ITEM NO.	REF. DRGS	MATL.SPEC.	WT/UNIT IN KGS	REMARKS
1	FOOT STEP PLATE	4x307x1010	1		RDSO SPEC C-K201 X2 Cr Ni N 18 7	7.36	

GROUP: 1-2 | SURFACE AREA IN Sq.m.: | WT/ASSY IN Kgs:

FOOT STEP PLATE

SCALE 1:2.5	SSE/D	
	CHD	
ALT a	ALTD	MUTHU KUMARAN S
	DRN	MUTHU KUMARAN S

DATE OF LATEST ALT.	DATE OF FIRST ISSUE	AME/SME
10-12-2025	28-06-2024	

INDIAN RAILWAY STANDARDS
INTEGRAL COACH FACTORY, CHENNAI - 600038

SHEET 1 OF 1

AAB12161 A2

AAB12162

▽ ROUGH MACHINED	(01) ROUGH CLEANED
▽▽ FINISH MACHINED	(01b) BURRS REMOVED
▽▽▽ FINE FINISH MACHINED	(18) CHAMFERED

REVISIONS			
ALT.	ZONE	DESCRIPTION	APPROVED & DATE

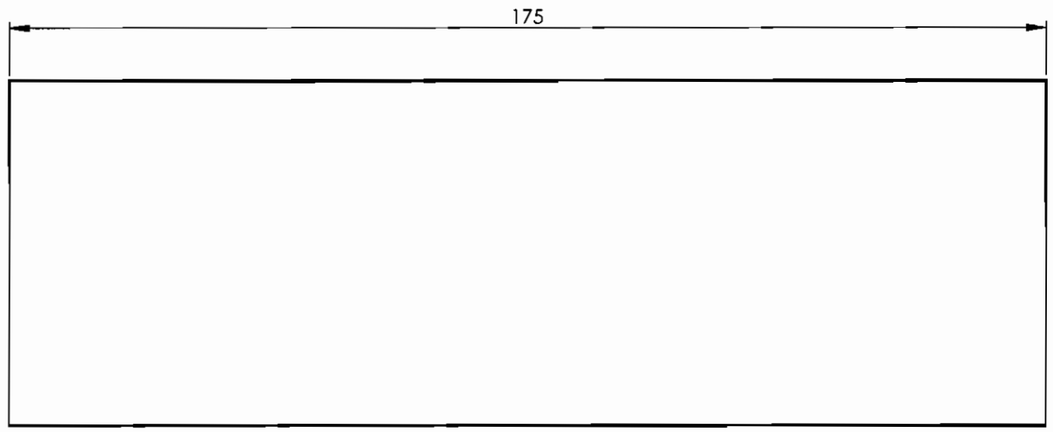

ALL DIMENSIONS ARE IN mm UNLESS OTHERWISE SPECIFIED. FOR UNTOLERANCED DIMENSIONS AND ROUGHNESS VALUES, REFER DRAWING NO ICF/STD-9-0-001.
ANY MANUAL ALTERATION SHALL AUTOMATICALLY RENDER THIS DRAWING INVALID. WELDING SYMBOLS ARE AS PER EN ISO 2553.
WEIGHT GIVEN IN DRAWING IS FOR INDICATIVE PURPOSE ONLY

NOTE:

1. ALL EDGE PREPARATION SHALL BE DONE BY MACHINING ONLY TO GRADE No. N10.
2. REMOVE ALL SHARP EDGES & BURRS.

QTY	DESCRIPTION	DIMENSIONS	ITEM NO.	REF. DRGS	MATL.SPEC.	WT/UNIT IN KGS	REMARKS
1	RIB	4x58x175	1		RDSO SPEC C-K201 X2 Cr Ni N 18 7	0.32	

GROUP: | SURFACE AREA IN Sq.m.: | WT/ASSY IN Kgs:

RIB

SCALE 1:1	SSE/D	
	CHD	
ALT. -	ALTD	
	DRN	MUTHU KUMARAN S

DATE OF LATEST ALT.	DATE OF FIRST ISSUE	AME/SME
	28-06-2024	

REF.DRG.NO.

INDIAN RAILWAY STANDARDS
INTEGRAL COACH FACTORY, CHENNAI - 600038

SHEET 1 OF 1

AAB12162 A3

AAB12163

▽ ROUGH MACHINED	(01) ROUGH CLEANED
▽▽ FINISH MACHINED	(01b) BURRS REMOVED
▽▽▽ FINE FINISH MACHINED	(18) CHAMFERED

REVISIONS			
ALT.	ZONE	DESCRIPTION	APPROVED & DATE

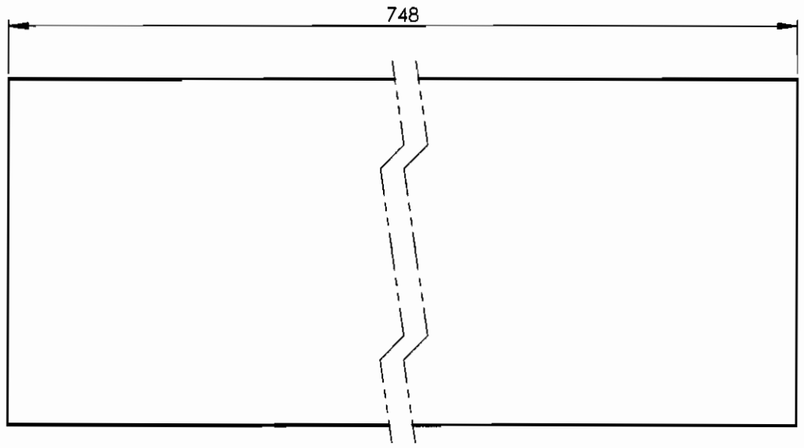

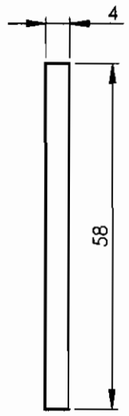

ALL DIMENSIONS ARE IN mm UNLESS OTHERWISE SPECIFIED. FOR UNTOLERANCED DIMENSIONS AND ROUGHNESS VALUES, REFER DRAWING NO ICF/STD-9-0-0001.
ANY MANUAL ALTERATION SHALL AUTOMATICALLY RENDER THIS DRAWING INVALID. WELDING SYMBOLS ARE AS PER EN ISO 2553.
WEIGHT GIVEN IN DRAWING IS FOR INDICATIVE PURPOSE ONLY

NOTE:

1. ALL EDGE PREPARATION SHALL BE DONE BY MACHINING ONLY TO GRADE No. N10.
2. REMOVE ALL SHARP EDGES & BURRS.

QTY	DESCRIPTION	DIMENSIONS	ITEM NO.	REF. DRGS	MATL.SPEC.	WT/UNIT IN KGS	REMARKS
1	PLATE	4x58x748	1		RDSO SPEC C-K201 X2 Cr Ni N 18 7	1.39	

GROUP: | SURFACE AREA IN Sq.m.: | WT/ASSY IN Kgs:

PLATE

SCALE 1:5	SSE/D	
	CHD	
ALT. -	ALTD	
	DRN	MUTHU KUMARAN S

REF.DRG.NO.

DATE OF LATEST ALT.	DATE OF FIRST ISSUE	AME/SME
	28-06-2024	

INDIAN RAILWAY STANDARDS
INTEGRAL COACH FACTORY, CHENNAI - 600038

SHEET 1 OF 1

AAB12163 A3

AAB12164

▽ ROUGH MACHINED	(01) ROUGH CLEANED
▽▽ FINISH MACHINED	(01b) BURRS REMOVED
▽▽▽ FINE FINISH MACHINED	(18) CHAMFERED

REVISIONS			
ALT.	ZONE	DESCRIPTION	APPROVED & DATE

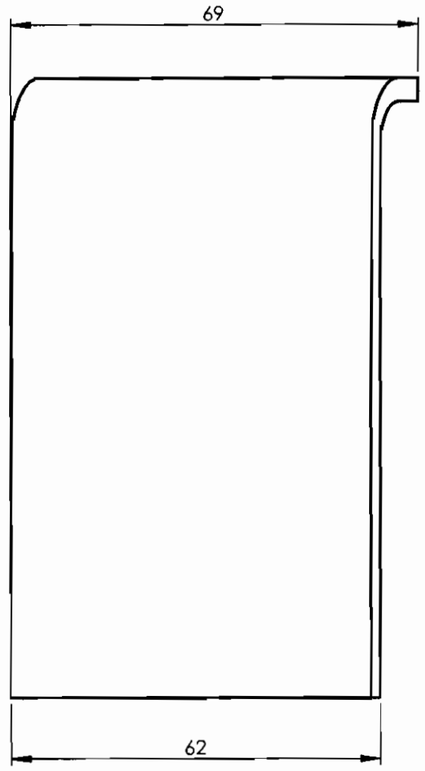

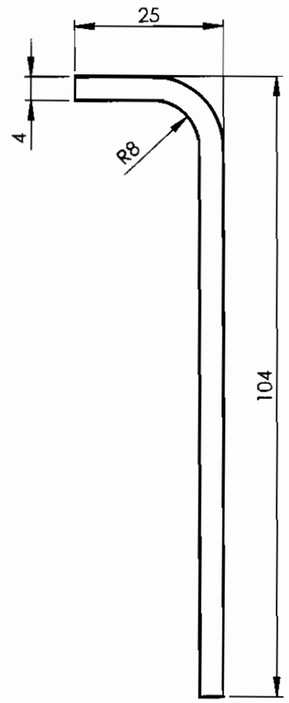

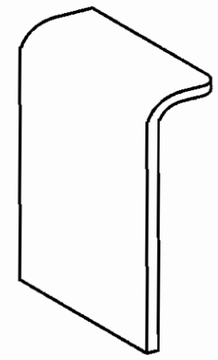

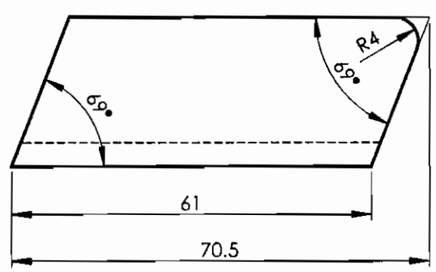

ALL DIMENSIONS ARE IN mm UNLESS OTHERWISE SPECIFIED. FOR UNTOLERANCED DIMENSIONS AND ROUGHNESS VALUES, REFER DRAWING NO ICF/STD-9-0-001.
ANY MANUAL ALTERATION SHALL AUTOMATICALLY RENDER THIS DRAWING INVALID. WELDING SYMBOLS ARE AS PER EN ISO 2553.
WEIGHT GIVEN IN DRAWING IS FOR INDICATIVE PURPOSE ONLY

NOTE:

1. ALL EDGE PREPARATION SHALL BE DONE BY MACHINING ONLY TO GRADE No. N10.
2. REMOVE ALL SHARP EDGES & BURRS.

QTY	DESCRIPTION	DIMENSIONS	ITEM NO.	REF. DRGS	MATL.SPEC.	WT/UNIT IN KGS	REMARKS
1	ANGLE	4x70x121	1		RDSO SPEC C-K201 X2 Cr Ni N 18 7	0.23	

GROUP: | SURFACE AREA IN Sq.m.: | WT/ASSY IN Kgs:

ANGLE

SCALE 1:1	SSE/D	
	CHD	
ALT. -	ALTD	
	DRN	MUTHU KUMARAN S

INDIAN RAILWAY STANDARDS
INTEGRAL COACH FACTORY, CHENNAI - 600038

SHEET 1 OF 1

AAB12164 A3

REF.DRG.NO.

	28-06-2024	
DATE OF LATEST ALT.	DATE OF FIRST ISSUE	AME/SME

AAB12165

▽ ROUGH MACHINED	(01) ROUGH CLEANED
▽▽ FINISH MACHINED	(01b) BURRS REMOVED
▽▽▽ FINE FINISH MACHINED	(18) CHAMFERED

REVISIONS			
ALT.	ZONE	DESCRIPTION	APPROVED & DATE

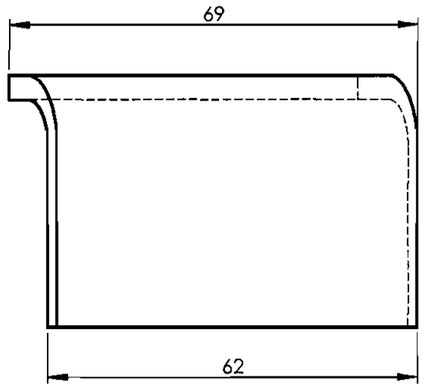

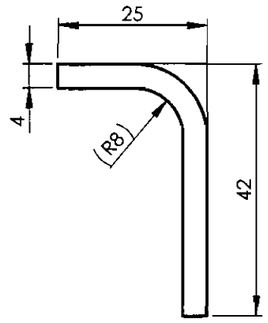

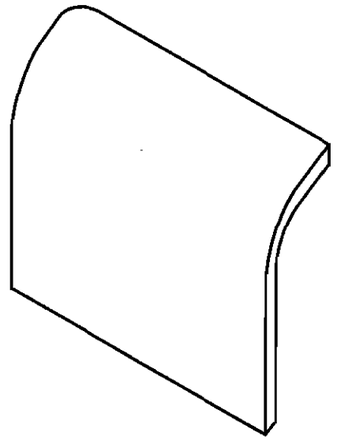

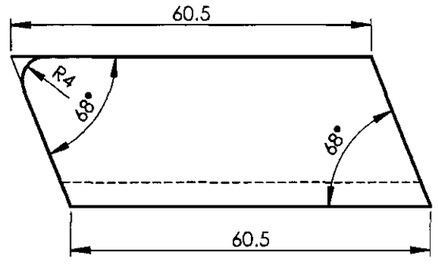

ALL DIMENSIONS ARE IN *mm* UNLESS OTHERWISE SPECIFIED. FOR UNTOLERANCED DIMENSIONS AND ROUGHNESS VALUES, REFER DRAWING NO ICF/STD-9-0-001.
ANY MANUAL ALTERATION SHALL AUTOMATICALLY RENDER THIS DRAWING INVALID. WELDING SYMBOLS ARE AS PER EN ISO 2553.
WEIGHT GIVEN IN DRAWING IS FOR INDICATIVE PURPOSE ONLY

NOTE:

1. ALL EDGE PREPARATION SHALL BE DONE BY MACHINING ONLY TO GRADE No. N10.
2. REMOVE ALL SHARP EDGES & BURRS.

QTY	DESCRIPTION	DIMENSIONS	ITEM NO.	REF. DRGS	MATL.SPEC.	WT/UNIT IN KGS	REMARKS
1	ANGLE	4x59x71	1		RDSO SPEC C-K201 X2 Cr Ni N 18 7	0.11	

GROUP: | SURFACE AREA IN Sq.m.: | WT/ASSY IN Kgs:

ANGLE

SCALE 1:1 | SSE/D | CHD | ALT. | ALTD | DRN: MUTHU KUMARAN S

INDIAN RAILWAY STANDARDS
INTEGRAL COACH FACTORY, CHENNAI - 600038

SHEET 1 OF 1

AAB12165 A3

REF.DRG.NO.	DATE OF LATEST ALT.	DATE OF FIRST ISSUE	AME/SME
		28-06-2024	

AAB12166

▽ ROUGH MACHINED	(01) ROUGH CLEANED
▽▽ FINISH MACHINED	(01b) BURRS REMOVED
▽▽▽ FINE FINISH MACHINED	(18) CHAMFERED

REVISIONS			
ALT.	ZONE	DESCRIPTION	APPROVED & DATE

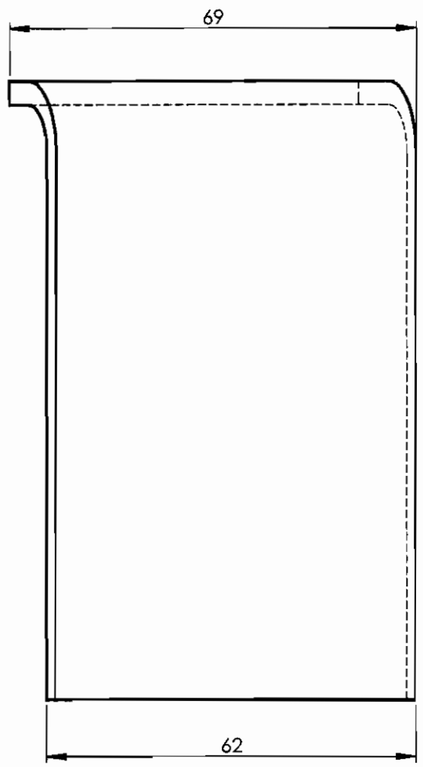

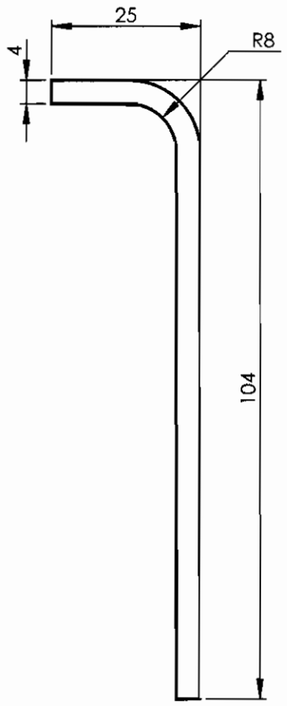

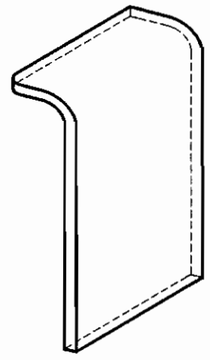

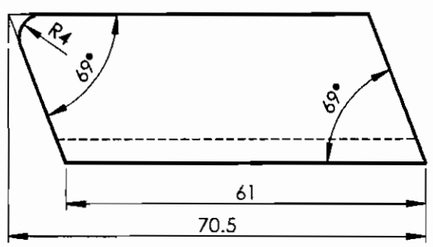

ALL DIMENSIONS ARE IN mm UNLESS OTHERWISE SPECIFIED. FOR UNTOLERANCED DIMENSIONS AND ROUGHNESS VALUES, REFER DRAWING NO ICF/STD-9-0-0001.
ANY MANUAL ALTERATION SHALL AUTOMATICALLY RENDER THIS DRAWING INVALID. WELDING SYMBOLS ARE AS PER EN ISO 2553.
WEIGHT GIVEN IN DRAWING IS FOR INDICATIVE PURPOSE ONLY

NOTE:

1. ALL EDGE PREPARATION SHALL BE DONE BY MACHINING ONLY TO GRADE No. N10.
2. REMOVE ALL SHARP EDGES & BURRS.

QTY	DESCRIPTION	DIMENSIONS	ITEM NO.	REF. DRGS	MATL.SPEC.	WT/UNIT IN KGS	REMARKS
1	ANGLE	4x70x121	1		RDSO SPEC C-K201 X2 Cr Ni N 18 7	0.23	

GROUP: | SURFACE AREA IN Sq.m.: | WT/ASSY IN Kgs:

ANGLE

SCALE 1:1	SSE/D	
	CHD	
ALT. -	ALTD	MUTHU KUMARAN S
	DRN	MUTHU KUMARAN S

INDIAN RAILWAY STANDARDS
INTEGRAL COACH FACTORY, CHENNAI - 600038

SHEET 1 OF 1

AAB12166 A3

DATE OF LATEST ALT.	DATE OF FIRST ISSUE	AME/SME
	28-06-2024	

REF.DRG.NO.

AAB12167

▽ ROUGH MACHINED	(01) ROUGH CLEANED
▽▽ FINISH MACHINED	(01b) BURRS REMOVED
▽▽▽ FINE FINISH MACHINED	(18) CHAMFERED

REVISIONS			
ALT.	ZONE	DESCRIPTION	APPROVED & DATE

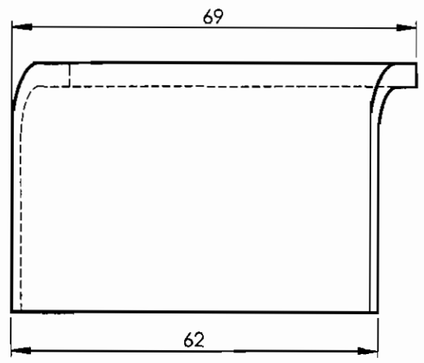

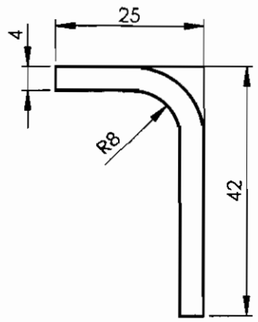

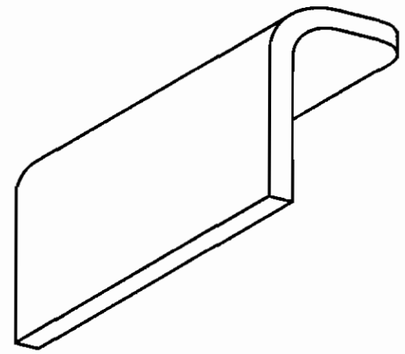

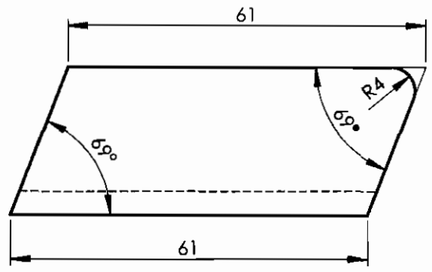

ALL DIMENSIONS ARE IN mm UNLESS OTHERWISE SPECIFIED. FOR UNTOLERANCED DIMENSIONS AND ROUGHNESS VALUES, REFER DRAWING NO ICF/STD-9-0-001.
ANY MANUAL ALTERATION SHALL AUTOMATICALLY RENDER THIS DRAWING INVALID. WELDING SYMBOLS ARE AS PER EN ISO 2553.
WEIGHT GIVEN IN DRAWING IS FOR INDICATIVE PURPOSE ONLY

NOTE:

1. ALL EDGE PREPARATION SHALL BE DONE BY MACHINING ONLY TO GRADE No. N10.
2. REMOVE ALL SHARP EDGES & BURRS.

QTY	DESCRIPTION	DIMENSIONS	ITEM NO.	REF. DRGS	MATL.SPEC.	WT/UNIT IN KGS	REMARKS
1	ANGLE	4x59x71	1		RDSO SPEC C-K201 X2 Cr Ni N 18 7	0.11	

GROUP: | SURFACE AREA IN Sq.m.: | WT/ASSY IN Kgs:

ANGLE

SCALE	SSE/D	
1:1	CHD	
ALT. -	ALTD	
	DRN	MUTHU KUMARAN S

INDIAN RAILWAY STANDARDS
INTEGRAL COACH FACTORY, CHENNAI - 600038

SHEET 1 OF 1

AAB12167 A3

REF.DRG.NO.	DATE OF LATEST ALT.	DATE OF FIRST ISSUE	AME/SME
		28-06-2024	

AAB12170

▽ ROUGH MACHINED	(01) ROUGH CLEANED
▽▽ FINISH MACHINED	(01b) BURRS REMOVED
▽▽▽ FINE FINISH MACHINED	(18) CHAMFERED

REVISIONS			
ALT.	ZONE	DESCRIPTION	APPROVED & DATE

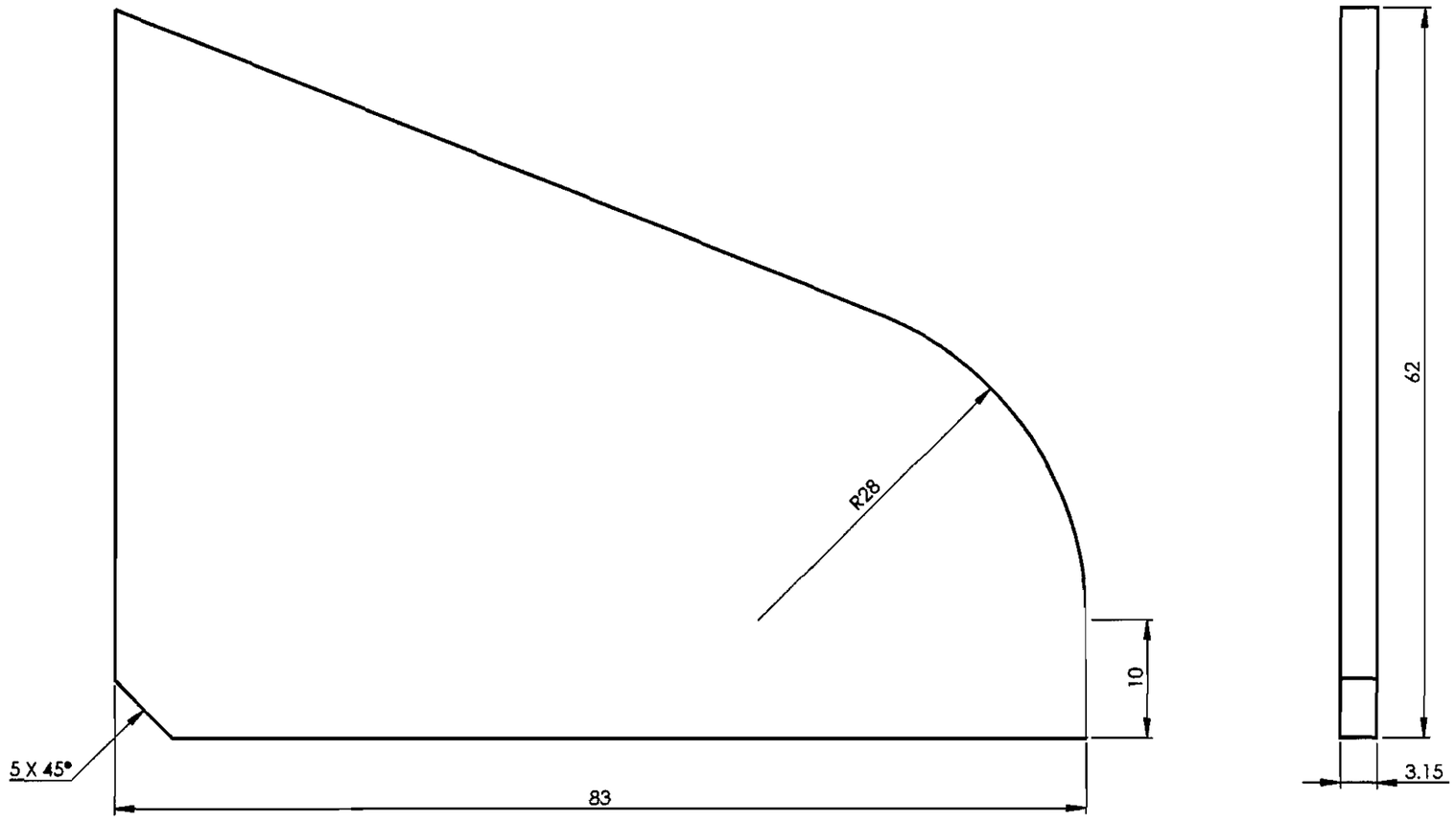

ALL DIMENSIONS ARE IN mm UNLESS OTHERWISE SPECIFIED. FOR UNTOLERANCED DIMENSIONS AND ROUGHNESS VALUES, REFER DRAWING NO ICF/STD-9-0-001.
ANY MANUAL ALTERATION SHALL AUTOMATICALLY RENDER THIS DRAWING INVALID. WELDING SYMBOLS ARE AS PER EN ISO 2553.
WEIGHT GIVEN IN DRAWING IS FOR INDICATIVE PURPOSE ONLY

QTY	DESCRIPTION	DIMENSIONS	ITEM NO.	REF. DRGS	MATL.SPEC.	WT/UNIT IN KGS	REMARKS
1	RIB	3.15x62x83	1		IRS M-41-97	0.09	

GROUP: 1-2 Head Stock | SURFACE AREA IN Sq.m.: | WT/ASSY IN Kgs:

RIB

SCALE 2:1	SSE/D	
	CHD	
ALT.	ALTD	
	DRN	S MUTHUKUMARAN

INDIAN RAILWAY STANDARDS
INTEGRAL COACH FACTORY, CHENNAI - 600038

SHEET 1 OF 1

AAB12170 | A3

-	12-07-2024	
DATE OF LATEST ALT.	DATE OF FIRST ISSUE	AME/SME

REF.DRG.NO.-

AAB12171

▽ ROUGH MACHINED	(01) ROUGH CLEANED
▽▽ FINISH MACHINED	(01b) BURRS REMOVED
▽▽▽ FINE FINISH MACHINED	(18) CHAMFERED

REVISIONS			
ALT.	ZONE	DESCRIPTION	APPROVED & DATE

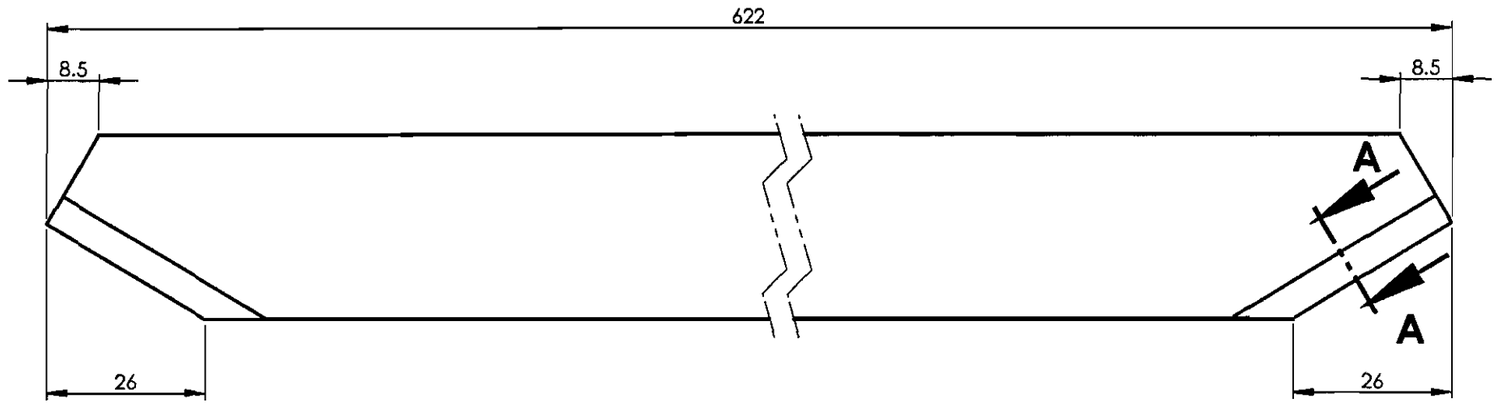

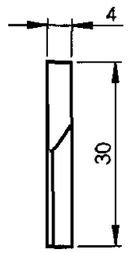

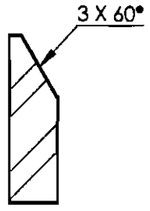

SECTION A-A
SCALE 2 : 1

ALL DIMENSIONS ARE IN mm UNLESS OTHERWISE SPECIFIED. FOR UNTOLERANCED DIMENSIONS AND ROUGHNESS VALUES, REFER DRAWING NO ICF/STD-9-0-001.
ANY MANUAL ALTERATION SHALL AUTOMATICALLY RENDER THIS DRAWING INVALID. WELDING SYMBOLS ARE AS PER EN ISO 2553.
WEIGHT GIVEN IN DRAWING IS FOR INDICATIVE PURPOSE ONLY

REF.DRG.NO.

QTY	DESCRIPTION	DIMENSIONS	ITEM NO.	REF. DRGS	MATL.SPEC.	WT/UNIT IN KGS	REMARKS
1	FLAT	4x30x622	1		SS-304	0.569	

GROUP: 1-2 Head Stock

SURFACE AREA IN Sq.m.:0.041

WT/ASSY IN Kgs:

FLAT

SCALE 1:5	SSE/D	
	CHD	
ALT. -	ALTD	
	DRN	S MUTHUKUMARAN

DATE OF LATEST ALT.	DATE OF FIRST ISSUE	AME/SME
	12-07-2024	

INDIAN RAILWAY STANDARDS
INTEGRAL COACH FACTORY, CHENNAI - 600038

SHEET 1 OF 1

AAB12171 A3

AAB12172

▽ ROUGH MACHINED	(01) ROUGH CLEANED
▽▽ FINISH MACHINED	(01b) BURRS REMOVED
▽▽▽ FINE FINISH MACHINED	(18) CHAMFERED

REVISIONS			
ALT.	ZONE	DESCRIPTION	APPROVED & DATE

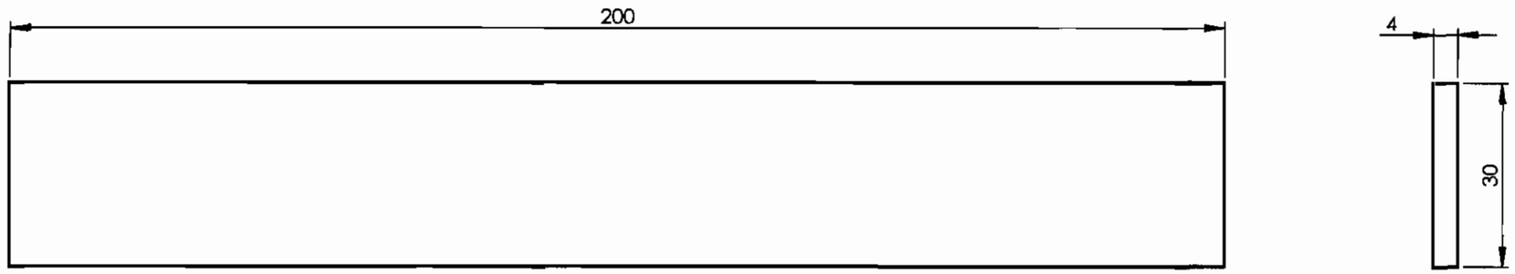

ALL DIMENSIONS ARE IN mm UNLESS OTHERWISE SPECIFIED. FOR UNTOLERANCED DIMENSIONS AND ROUGHNESS VALUES, REFER DRAWING NO ICF/STD-9-0-001.
ANY MANUAL ALTERATION SHALL AUTOMATICALLY RENDER THIS DRAWING INVALID. WELDING SYMBOLS ARE AS PER EN ISO 2553.
WEIGHT GIVEN IN DRAWING IS FOR INDICATIVE PURPOSE ONLY

REF.DRG.NO.-

	12-07-2024	
DATE OF LATEST ALT.	DATE OF FIRST ISSUE	AME/SME

QTY	DESCRIPTION	DIMENSIONS	ITEM NO.	REF. DRGS	MATL.SPEC.	WT/UNIT IN KGS	REMARKS
1	FLAT	4x30x200	1		SS-304	0.190	

GROUP: 1-2 Head Stock | SURFACE AREA IN Sq.m.:0.014 | WT/ASSY IN Kgs:

FLAT

SCALE 1:1	SSE/D	
	CHD	
ALT. -	ALTD	
	DRN	S MUTHUKUMARAN

INDIAN RAILWAY STANDARDS
INTEGRAL COACH FACTORY, CHENNAI - 600038

SHEET 1 OF 1

AAB12172 A3

AAB12173

▽ ROUGH MACHINED	(01) ROUGH CLEANED
▽▽ FINISH MACHINED	(01b) BURRS REMOVED
▽▽▽ FINE FINISH MACHINED	(18) CHAMFERED

REVISIONS			
ALT.	ZONE	DESCRIPTION	APPROVED & DATE

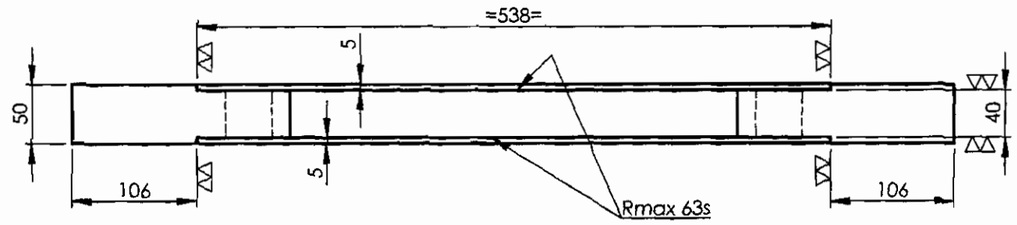

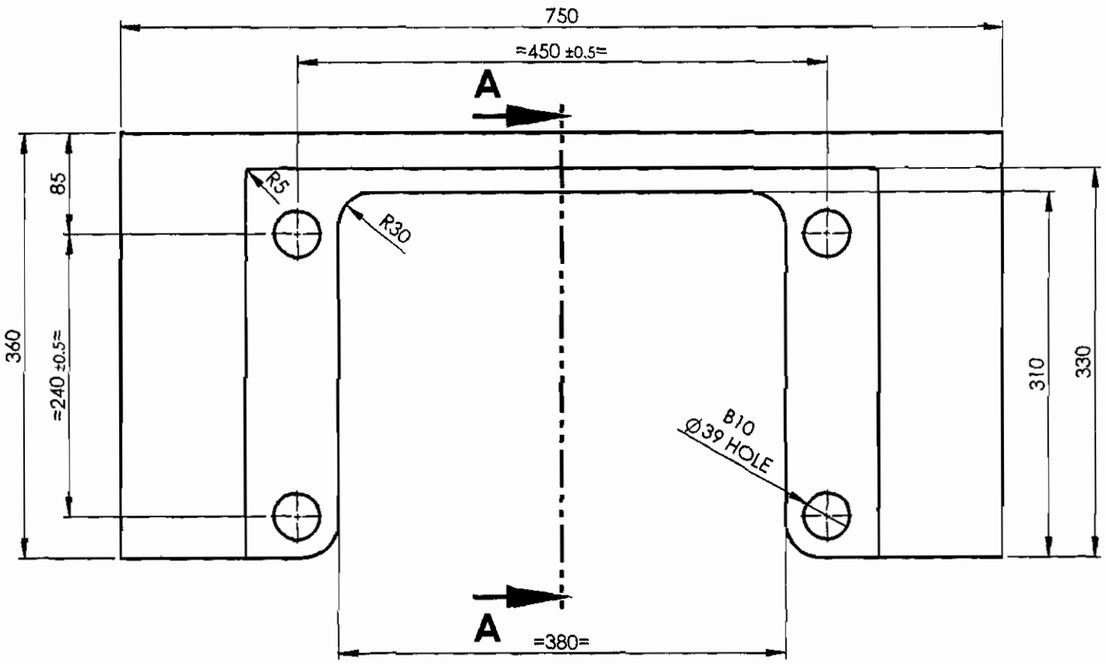

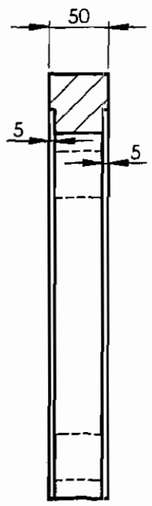

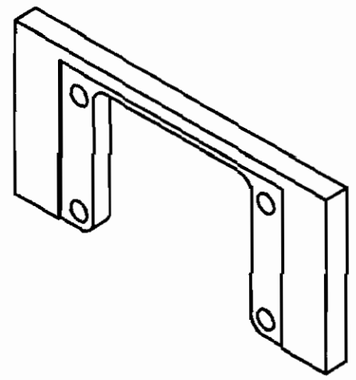

SECTION A-A

NOTE:

1. ALL EDGE PREPARATION SHALL BE DONE BY MACHINING ONLY TO GRADE No. N10.
2. REMOVE ALL SHARP EDGES & BURRS.

QTY	DESCRIPTION	DIMENSIONS	ITEM NO.	REF. DRGS	MATL.SPEC.	WT/UNIT IN KGS	REMARKS
1	COUPLER PAD DTC FRONT END	50x360x750	1		EN10025-5 2004 S355J2W N	53.55	

GROUP: 1-2 Head Stock | SURFACE AREA IN Sq.m.: | WT/ASSY IN Kgs:

COUPLER PAD DTC FRONT END

SCALE 1:5	SSE/D	
	CHD	
ALT.	ALTD	
	DRN	S MUTHUKUMARAN

INDIAN RAILWAY STANDARDS
INTEGRAL COACH FACTORY, CHENNAI - 600038

SHEET 1 OF 1

AAB12173 | A3

DATE OF LATEST ALT.	DATE OF FIRST ISSUE	AME/SME
	22-07-2024	

REF.DRG.NO.

ALL DIMENSIONS ARE IN mm UNLESS OTHERWISE SPECIFIED. FOR UNTOLERANCED DIMENSIONS AND ROUGHNESS VALUES, REFER DRAWING NO ICF/STD-9-0-001.
ANY MANUAL ALTERATION SHALL AUTOMATICALLY RENDER THIS DRAWING INVALID. WELDING SYMBOLS ARE AS PER EN ISO 2553.
WEIGHT GIVEN IN DRAWING IS FOR INDICATIVE PURPOSE ONLY

AAB12174

▽ ROUGH MACHINED	(01) ROUGH CLEANED
▽▽ FINISH MACHINED	(01b) BURRS REMOVED
▽▽▽ FINE FINISH MACHINED	(18) CHAMFERED

REVISIONS			
ALT.	ZONE	DESCRIPTION	APPROVED & DATE

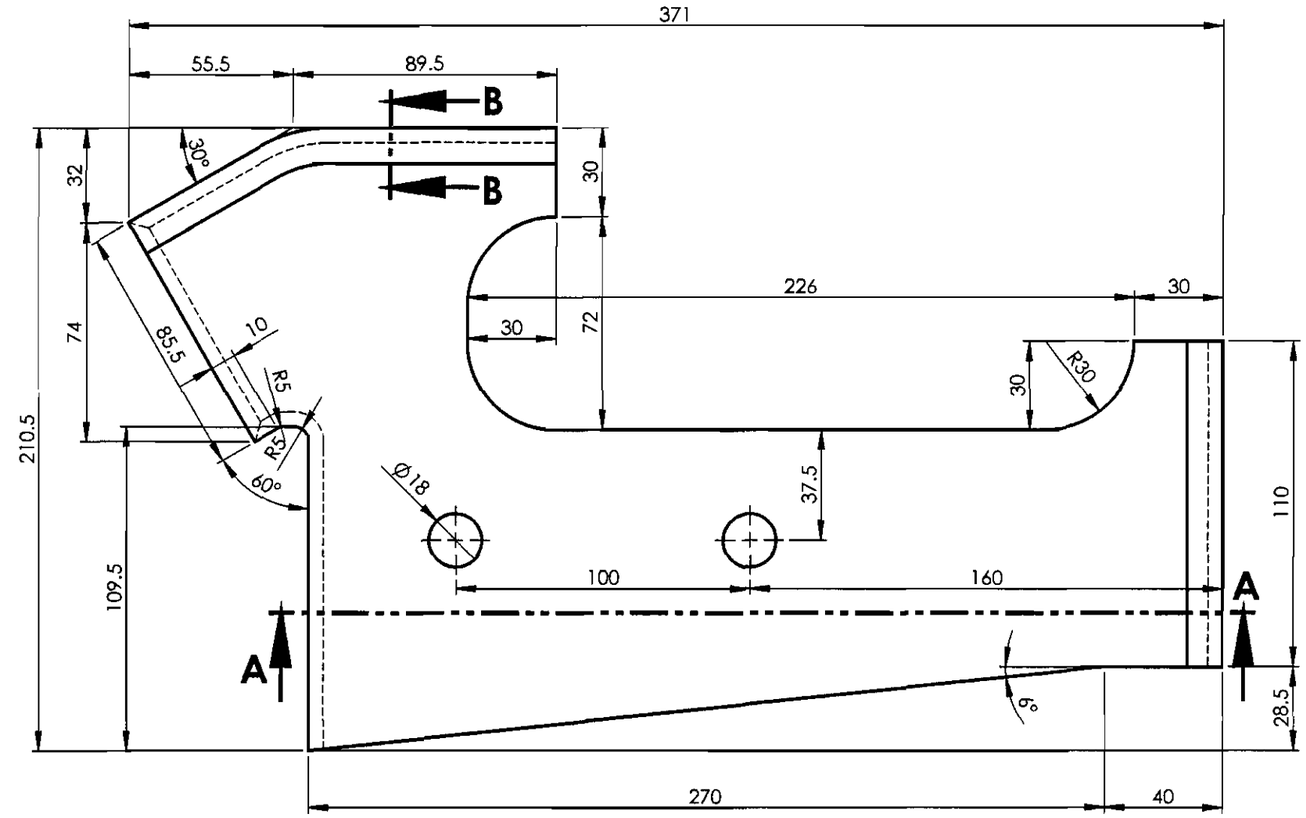

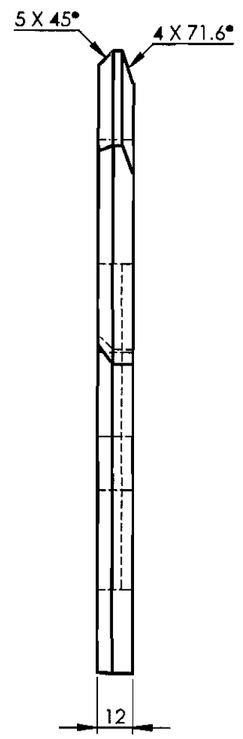

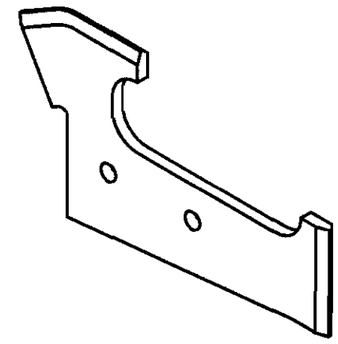

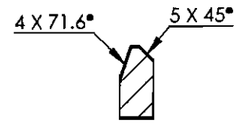

SECTION B-B

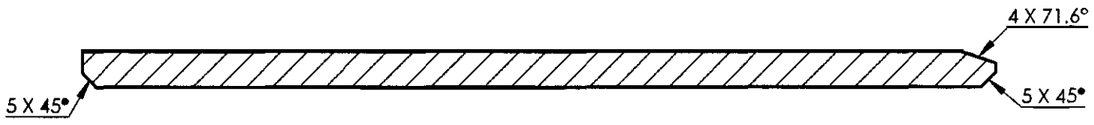

SECTION A-A

ALL DIMENSIONS ARE IN mm UNLESS OTHERWISE SPECIFIED. FOR UNTOLERANCED DIMENSIONS AND ROUGHNESS VALUES, REFER DRAWING NO ICF/STD-9-0-001.
ANY MANUAL ALTERATION SHALL AUTOMATICALLY RENDER THIS DRAWING INVALID. WELDING SYMBOLS ARE AS PER EN ISO 2553.
WEIGHT GIVEN IN DRAWING IS FOR INDICATIVE PURPOSE ONLY

NOTE:

1. ALL EDGE PREPARATION SHALL BE DONE BY MACHINING ONLY TO GRADE No. N10.
2. REMOVE ALL SHARP EDGES & BURRS.

QTY	DESCRIPTION	DIMENSIONS	ITEM NO.	REF. DRGS	MATL.SPEC.	WT/UNIT IN KGS	REMARKS
1	PLATE	12x211x371	1		EN10025-5 2004 S355J2W N	3.67	

GROUP: 1-2 Head Stock | SURFACE AREA IN Sq.m.: | WT/ASSY IN Kgs:

PLATE

SCALE 1:2	SSE/D	
	CHD	
ALT.	ALTD	
	DRN	MUTHUKUMARAN S

INDIAN RAILWAY STANDARDS
INTEGRAL COACH FACTORY, CHENNAI - 600038

SHEET 1 OF 1

AAB12174 A3

DATE OF LATEST ALT.	DATE OF FIRST ISSUE	AME/SME
	22-07-2024	

REF.DRG.NO.

AAB12175

▽ ROUGH MACHINED	(01) ROUGH CLEANED
▽▽ FINISH MACHINED	(01b) BURRS REMOVED
▽▽▽ FINE FINISH MACHINED	(18) CHAMFERED

REVISIONS			
ALT.	ZONE	DESCRIPTION	APPROVED & DATE

THIS DRG. OPPOSITE TO AAB12174 SO REFER THE DRG. FOR DETAILS

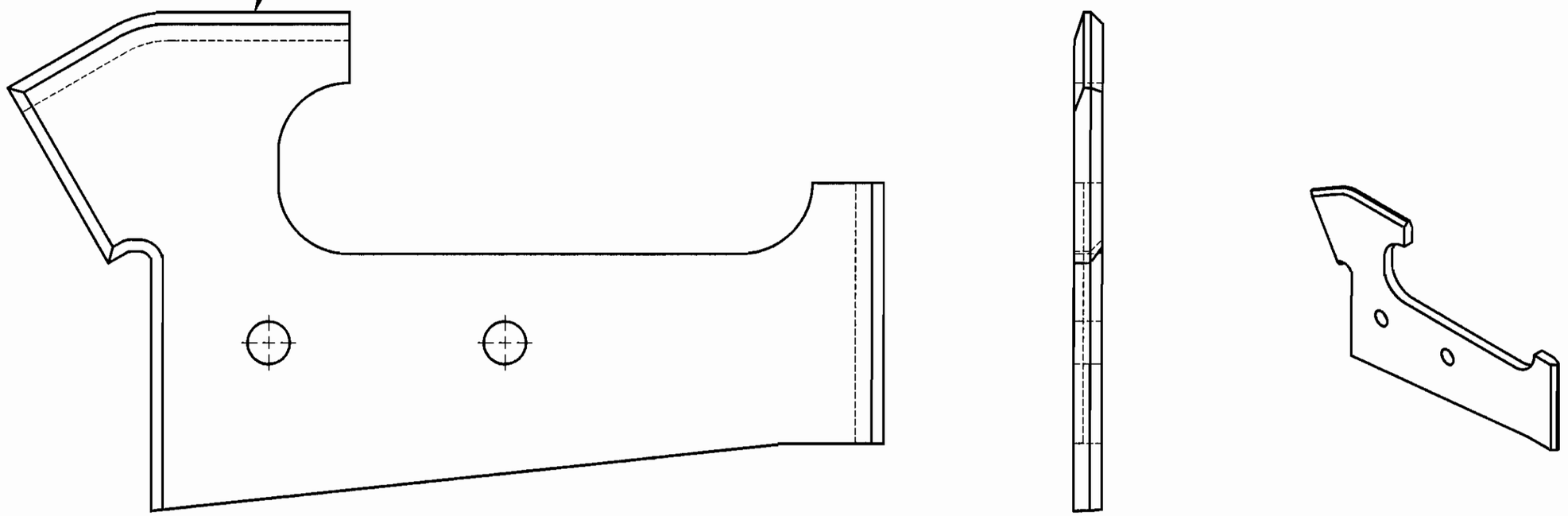

ALL DIMENSIONS ARE IN mm UNLESS OTHERWISE SPECIFIED. FOR UNTOLERANCED DIMENSIONS AND ROUGHNESS VALUES, REFER DRAWING NO ICF/STD-9-0-001.
ANY MANUAL ALTERATION SHALL AUTOMATICALLY RENDER THIS DRAWING INVALID. WELDING SYMBOLS ARE AS PER EN ISO 2553.
WEIGHT GIVEN IN DRAWING IS FOR INDICATIVE PURPOSE ONLY

NOTE:

1. ALL EDGE PREPARATION SHALL BE DONE BY MACHINING ONLY TO GRADE No. N10.
2. REMOVE ALL SHARP EDGES & BURRS.

QTY	DESCRIPTION	DIMENSIONS	ITEM NO.	REF. DRGS	MATL.SPEC.	WT/UNIT IN KGS	REMARKS
1	PLATE	12x211x371	1		EN10025-5 2004 S355J2W N	3.67	

GROUP: 1-2 Head Stock | SURFACE AREA IN Sq.m.: | WT/ASSY IN Kgs:

PLATE

SCALE 1:2	SSE/D	
	CHD	
ALT.	ALTD	
	DRN	S MUTHUKUMARAN

INDIAN RAILWAY STANDARDS
INTEGRAL COACH FACTORY, CHENNAI - 600038

SHEET 1 OF 1

AAB12175 | A3

REF.DRG.NO.	DATE OF LATEST ALT.	DATE OF FIRST ISSUE	AME/SME
		22-07-2024	

AAB12176

▽ ROUGH MACHINED	(01) ROUGH CLEANED
▽▽ FINISH MACHINED	(01b) BURRS REMOVED
▽▽▽ FINE FINISH MACHINED	(18) CHAMFERED

REVISIONS			
ALT.	ZONE	DESCRIPTION	APPROVED & DATE

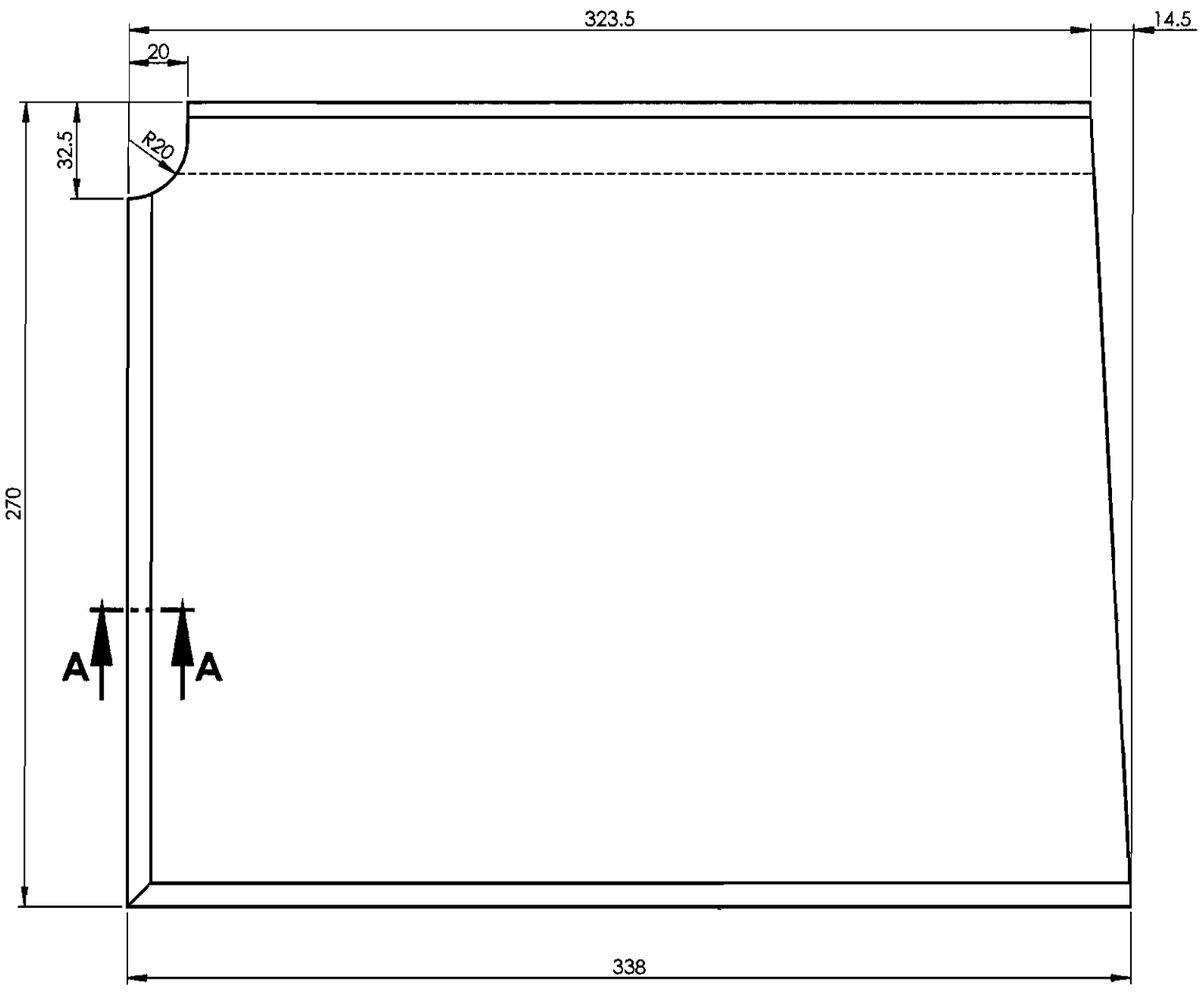

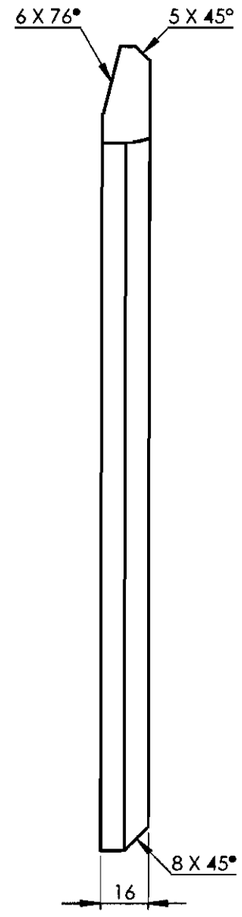

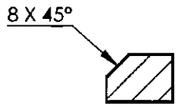

SECTION A-A

ALL DIMENSIONS ARE IN mm UNLESS OTHERWISE SPECIFIED. FOR UNTOLERANCED DIMENSIONS AND ROUGHNESS VALUES, REFER DRAWING NO ICF/STD-9-0-001.
ANY MANUAL ALTERATION SHALL AUTOMATICALLY RENDER THIS DRAWING INVALID. WELDING SYMBOLS ARE AS PER EN ISO 2553.
WEIGHT GIVEN IN DRAWING IS FOR INDICATIVE PURPOSE ONLY

NOTE:

1. ALL EDGE PREPARATION SHALL BE DONE BY MACHINING ONLY TO GRADE No. N10.
2. REMOVE ALL SHARP EDGES & BURRS.

QTY	DESCRIPTION	DIMENSIONS	ITEM NO.	REF. DRGS	MATL.SPEC.	WT/UNIT IN KGS	REMARKS
1	PLATE	16x270x338	1		EN10025-5 2004 S355J2W N	10.80	

GROUP: 1-2 Head Stock | SURFACE AREA IN Sq.m.: | WT/ASSY IN Kgs:

PLATE

SCALE 1:2	SSE/D	
	CHD	
ALT. -	ALTD	
	DRN	S MUTHUKUMARAN

INDIAN RAILWAY STANDARDS
INTEGRAL COACH FACTORY, CHENNAI - 600038

SHEET 1 OF 1

AAB12176 A3

REF.DRG.NO.	DATE OF LATEST ALT.	DATE OF FIRST ISSUE	AME/SME
		22-.7-2024	

A0112003

ROUGH MACHINED	ROUGH CLEANED
FINISH MACHINED	BURRS REMOVED
FINE FINISH MACHINED	CHAMFERED

REVISIONS			
ALT.	ZONE	DESCRIPTION	APPROVED & DATE
a		QTY. FOR ITEM-1 ALTD FROM 2 TO 1, ITEM-6 ADDED.	

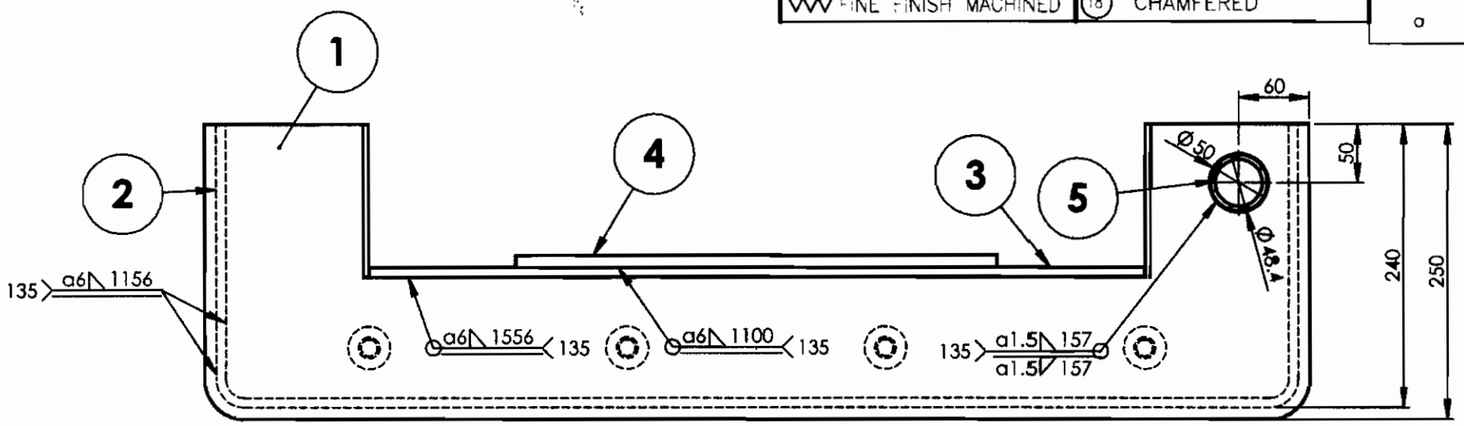

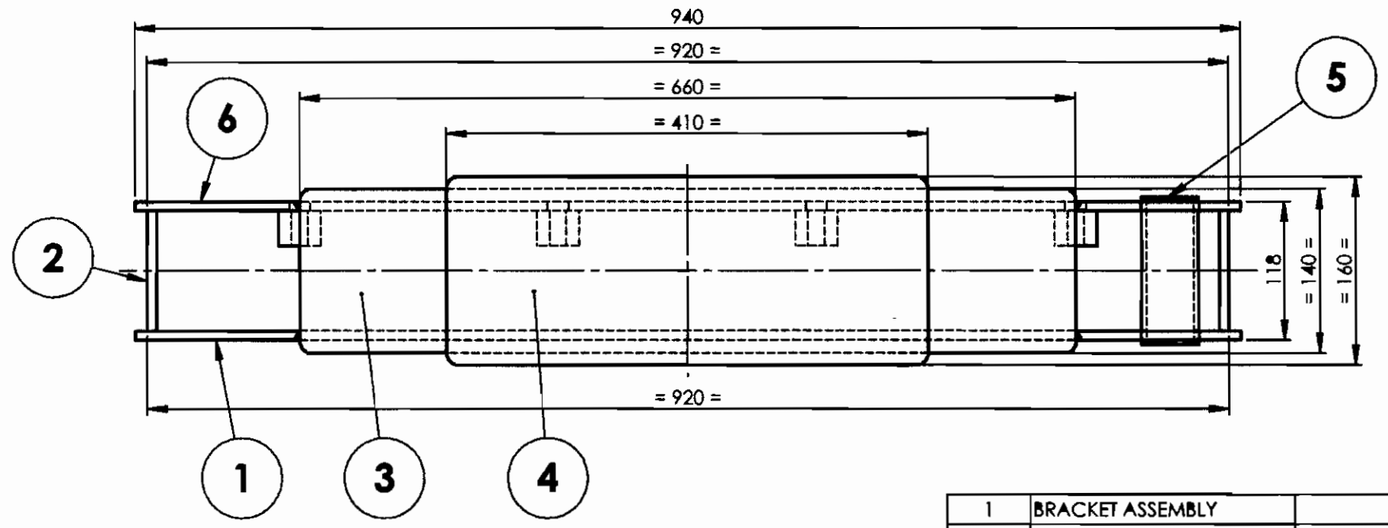

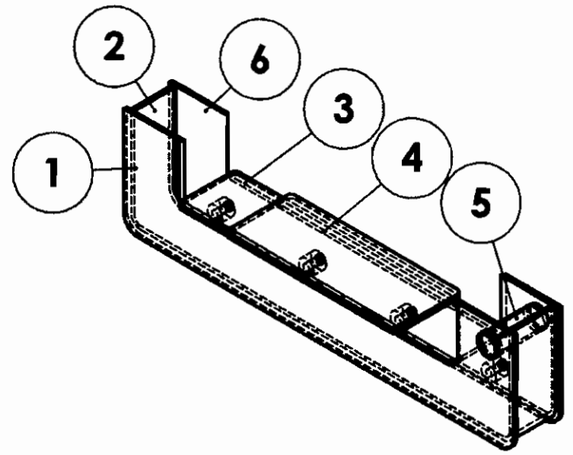

QTY.	DESCRIPTION	DIMENSIONS	ITEM NO.	REF.DRGS.	MATL	WT/UNIT IN KGS	REMARKS
1	BRACKET ASSEMBLY		6	A0112018		10.07	
1	TUBE		5	AAB12428		0.57	
1	PLATE		4	AAB12266		5.14	
1	PLATE		3	AAB12264		5.80	
1	BRACKET		2	AAB12269		8.76	
1	BRACKET		1	AAB12263		9.31	

GROUP: 1-1 | SURFACE AREA IN Sq.m.:1.334 | WT/ASSY IN Kgs:

BRACKET FRAME

SCALE 1:5	SSE/D	
	CHD	
ALT. a	ALTD	S MUTHUKUMARAN
	DRN	S MUTHUKUMARAN

INDIAN RAILWAY STANDARDS
INTEGRAL COACH FACTORY, CHENNAI - 600038

SHEET 1 OF 1

VBS/DTC/CN

A0112003 A3

19-03-2026	21-11-2025	
DATE OF LATEST ALT.	DATE OF FIRST ISSUE	AME/SME

REF.DRG.NO.-

ALL DIMENSIONS ARE IN mm UNLESS OTHERWISE SPECIFIED. FOR UNTOLERANCED DIMENSIONS AND ROUGHNESS VALUES, REFER DRAWING NO ICF/STD-9-0-001.
ANY MANUAL ALTERATION SHALL AUTOMATICALLY RENDER THIS DRAWING INVALID. WELDING SYMBOLS ARE AS PER EN ISO 2553.
WEIGHT GIVEN IN DRAWING IS FOR INDICATIVE PURPOSE ONLY

14667

A0112004

▽ ROUGH MACHINED	(01) ROUGH CLEANED
▽▽ FINISH MACHINED	(01b) BURRS REMOVED
▽▽▽ FINE FINISH MACHINED	(18) CHAMFERED

REVISIONS			
ALT.	ZONE	DESCRIPTION	APPROVED & DATE

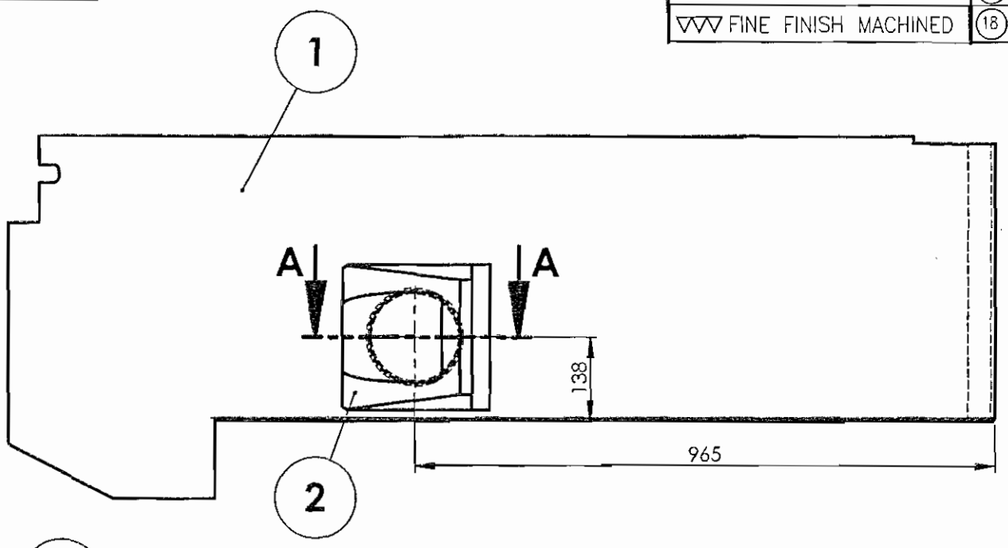

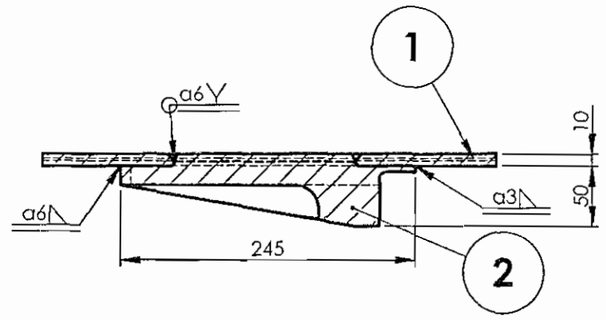

SECTION A-A
SCALE 1 : 5

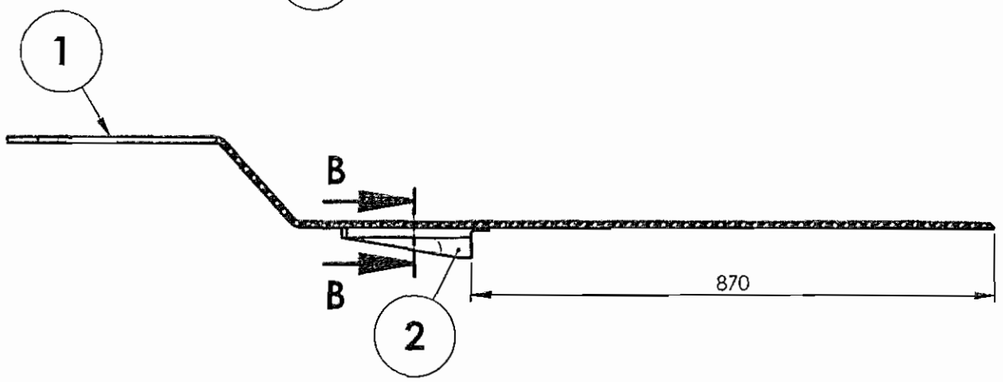

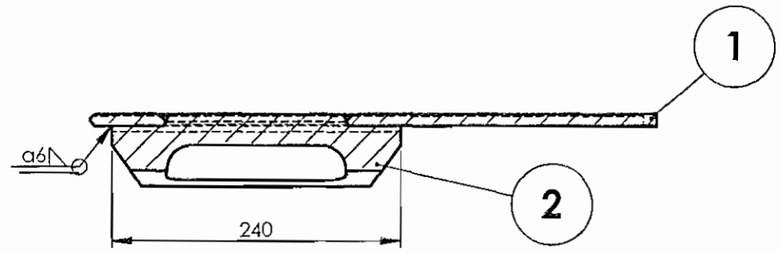

SECTION B-B
SCALE 1 : 5

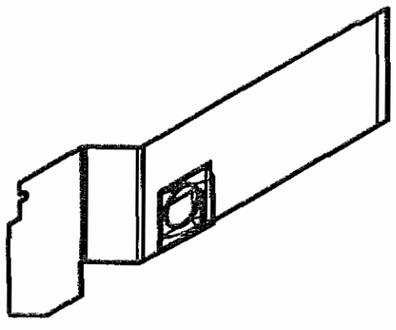

ALL DIMENSIONS ARE IN mm UNLESS OTHERWISE SPECIFIED. FOR UNTOLERANCED DIMENSIONS AND ROUGHNESS VALUES, REFER DRAWING NO ICF/STD-9-0-001.
ANY MANUAL ALTERATION SHALL AUTOMATICALLY RENDER THIS DRAWING INVALID. WELDING SYMBOLS ARE AS PER EN ISO 2553.
WEIGHT GIVEN IN DRAWING IS FOR INDICATIVE PURPOSE ONLY

REF.DRG.NO.-

QTY.	DESCRIPTION	DIMENSIONS	ITEM NO.	REF.DRGS.	MATL	WT/UNIT IN KGS.	REMARKS
1	STOP		2	AAA12091		12.652	
1	WEB		1	AAB12258		63.01	

GROUP: 1-2 Head Stock | SURFACE AREA IN Sq.m.: 1809037.97 | WT/ASSY IN Kgs:

COUPLER CARRIER COMPLETE

SCALE	SSE/D	
1:10	CHD	
ALT. -	ALTD	
	DRN	S MUTHUKUMARAN

INDIAN RAILWAY STANDARDS
INTEGRAL COACH FACTORY, CHENNAI - 600038

SHEET 1 OF 1

VBS/DTC/CN

A0112004 | A3

DATE OF LATEST ALT.	DATE OF FIRST ISSUE	AME/SME
	26-11-2025	

A0112005

▽ ROUGH MACHINED	(01) ROUGH CLEANED
▽▽ FINISH MACHINED	(01b) BURRS REMOVED
▽▽▽ FINE FINISH MACHINED	(18) CHAMFERED

REVISIONS			
ALT.	ZONE	DESCRIPTION	APPROVED & DATE

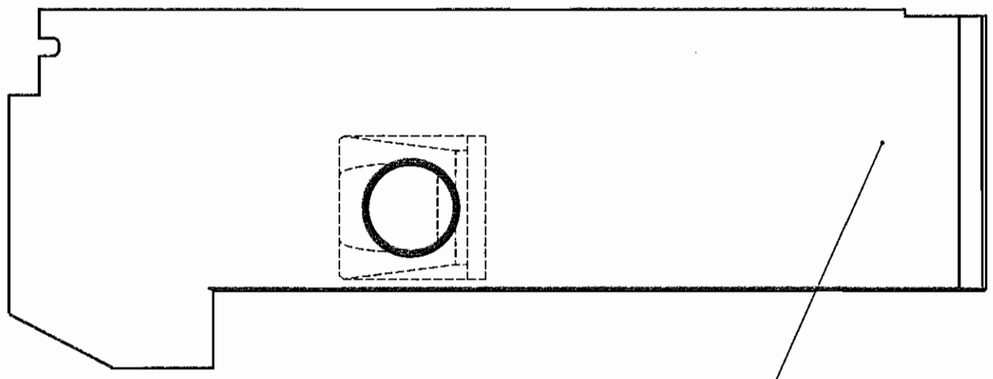

THIS ITEM IS OPPOSITE TO THE ITEM No A0112004
SO REFER THE DRG. FOR DETAILS.

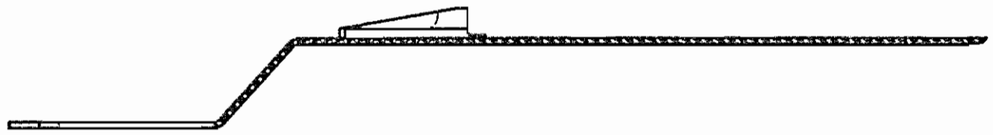

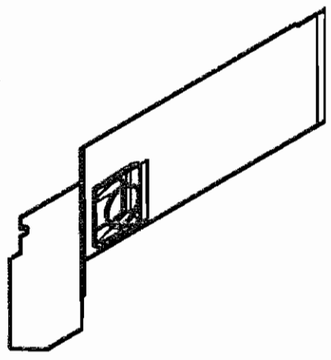

ALL DIMENSIONS ARE IN mm UNLESS OTHERWISE SPECIFIED. FOR UNTOLERANCED DIMENSIONS AND ROUGHNESS VALUES, REFER DRAWING NO ICF/STD-9-0-001.
ANY MANUAL ALTERATION SHALL AUTOMATICALLY RENDER THIS DRAWING INVALID. WELDING SYMBOLS ARE AS PER EN ISO 2553.
WEIGHT GIVEN IN DRAWING IS FOR INDICATIVE PURPOSE ONLY

REF.DRG.NO.-

QTY.	DESCRIPTION	DIMENSIONS	ITEM NO.	REF.DRGS.	MATL	WT/UNIT IN KGS.	REMARKS
1	STOP		2	AAA12091		12.652	
1	WEB		1	AAB12257		63.01	

GROUP: 1-2 Head Stock | SURFACE AREA IN Sq.m.:1809037.83 | WT/ASSY IN Kgs:

COUPLER CARRIER COMPLETE

SCALE 1:10	SSE/D	
	CHD	
ALT. -	ALTD	
	DRN	S MUTHUKUMARAN

INDIAN RAILWAY STANDARDS
INTEGRAL COACH FACTORY, CHENNAI - 600038

SHEET 1 OF 1

VBS/DTC/CN

A0112005 A3

DATE OF LATEST ALT.	DATE OF FIRST ISSUE	AME/SME
	26-11-2025	

A0112006

▽ ROUGH MACHINED	(01) ROUGH CLEANED
▽▽ FINISH MACHINED	(01b) BURRS REMOVED
▽▽▽ FINE FINISH MACHINED	(18) CHAMFERED

REVISIONS			
ALT.	ZONE	DESCRIPTION	APPROVED & DATE

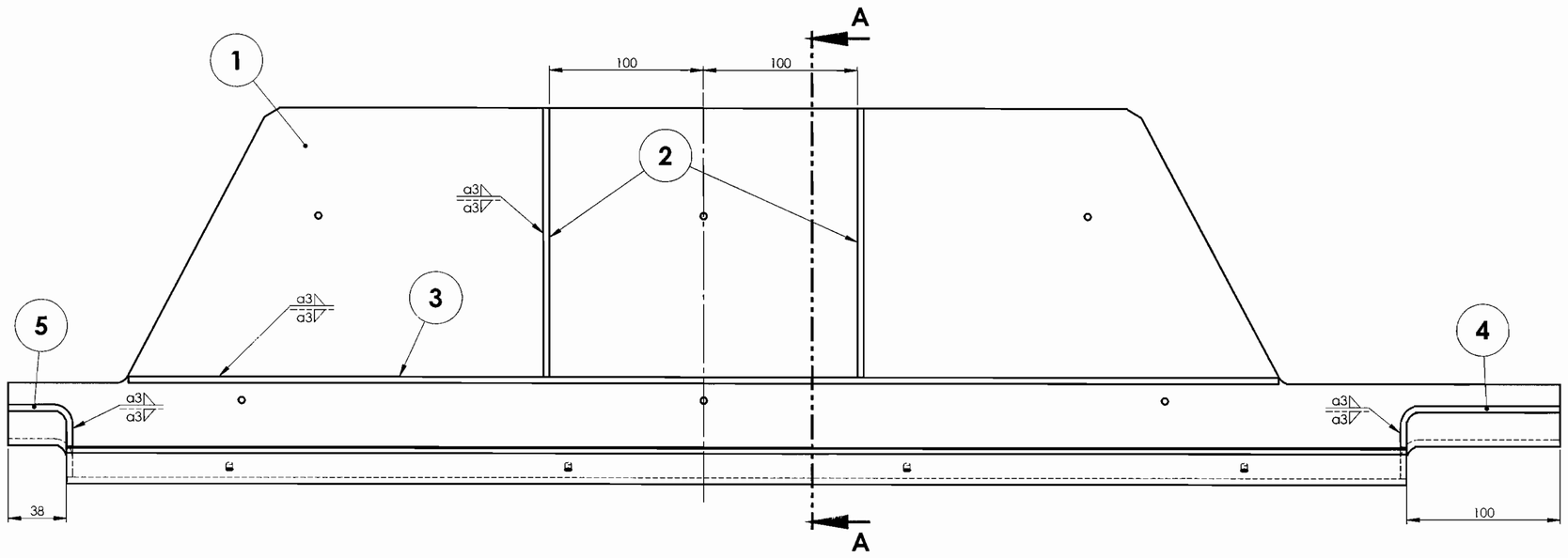

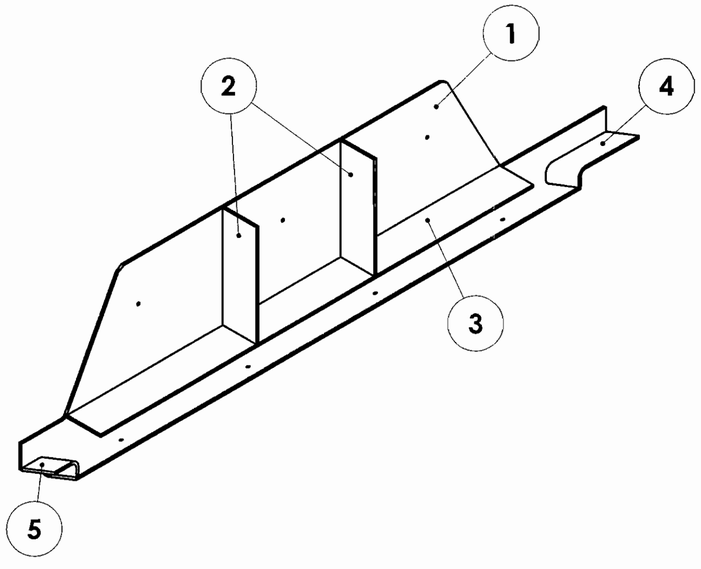

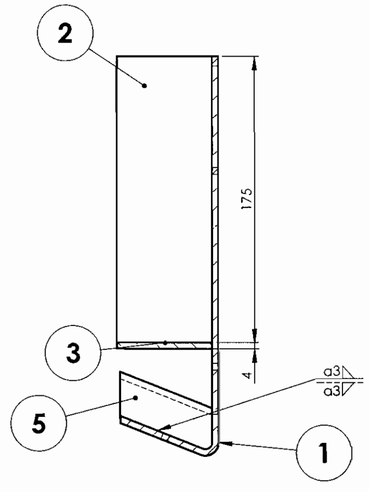

SECTION A-A

NOTE:

1. WELDING SYMBOLS SHALL BE AS PER EN ISO-2553.
2. ALL WELD PERFORMANCE CLASS SHALL BE CP C2 UNLESS OTHERWISE SPECIFIED.
3. FOR WELD TEST PREFERENCES REFER DRG.No. ICF/STD-9-0-998.
4. FOR WELD PROCEDURE SPECIFICATION REFER DRG.No. ICF/STD-9-0-999.
5. WELD JOINT PREPARATION SHALL BE AS PER EN ISO 9692.
6. REMOVE ALL SPATTERS AFTER WELDING.

QTY.	DESCRIPTION	DIMENSIONS	ITEM NO.	REF.DRGS.	MATL	WT/UNIT IN KGS	REMARKS
1	ANGLE		5	AAB12165		0.11	
1	ANGLE		4	AAB12164		0.23	
1	PLATE		3	AAB12163		1.39	
2	RIB		2	AAB12162		0.32	
1	FOOT STEP PLATE		1	AAB12160		7.36	

GROUP: 1-2 | SURFACE AREA IN Sq.m.: | WT/ASSY IN Kgs:

FOOT PLATE ASSY.

SCALE 1:2.5	SSE/D		
	CHD		
ALT -	ALTD		
	DRN	S MUTHUKUMARAN	

INDIAN RAILWAY STANDARDS
INTEGRAL COACH FACTORY, CHENNAI - 600038

VBS/DTC/CN

SHEET 1 OF 1

A0112006 A2

DATE OF LATEST ALT.	DATE OF FIRST ISSUE	
	28-06-2024	AME/SME

REF.DRG.NO.

ALL DIMENSIONS ARE IN mm UNLESS OTHERWISE SPECIFIED. FOR UNTOLERANCED DIMENSIONS AND ROUGHNESS VALUES, REFER DRAWING NO ICF/STD-9-0-001.
ANY MANUAL ALTERATION SHALL AUTOMATICALLY RENDER THIS DRAWING INVALID. WELDING SYMBOLS ARE AS PER EN ISO 2553. WEIGHT GIVEN IN DRAWING IS FOR INDICATIVE PURPOSE ONLY

A0112007

▽ ROUGH MACHINED	(01) ROUGH CLEANED
▽▽ FINISH MACHINED	(11a) BURRS REMOVED
▽▽▽ FINE FINISH MACHINED	(18) CHAMFERED

REVISIONS			
ALT.	ZONE	DESCRIPTION	APPROVED & DATE
a		ASSEMBLY UPDATED AS PER PARTS	

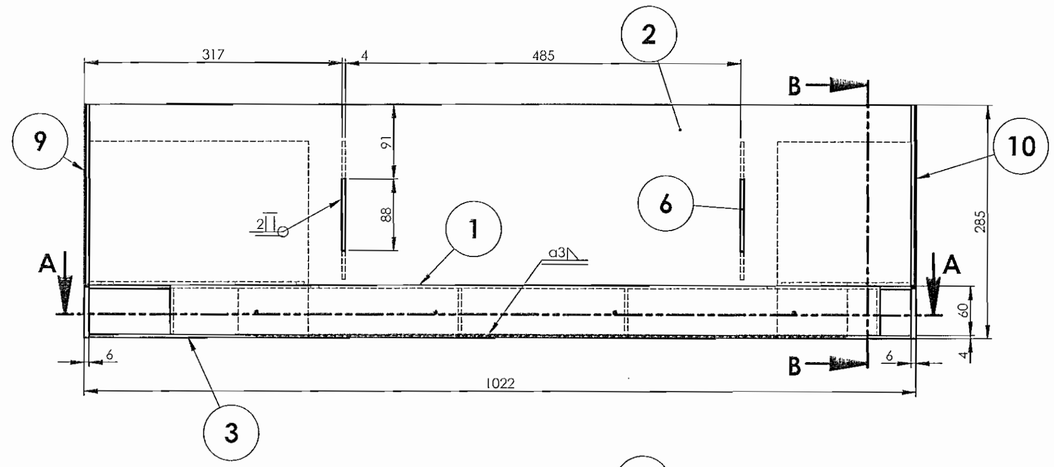

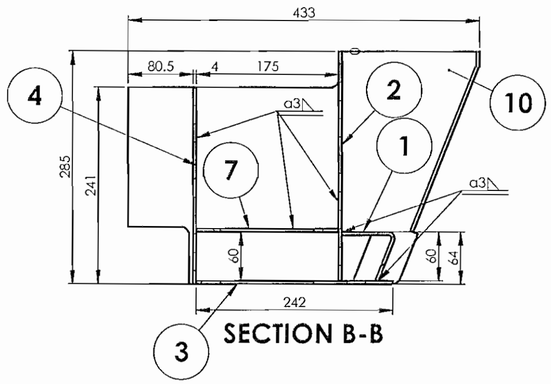

SECTION B-B

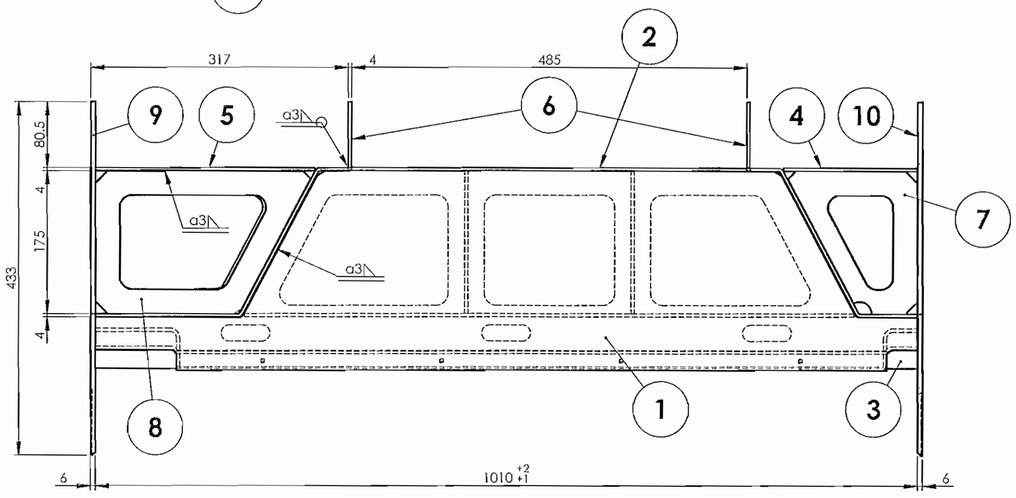

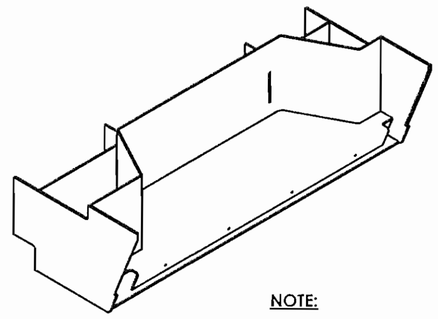

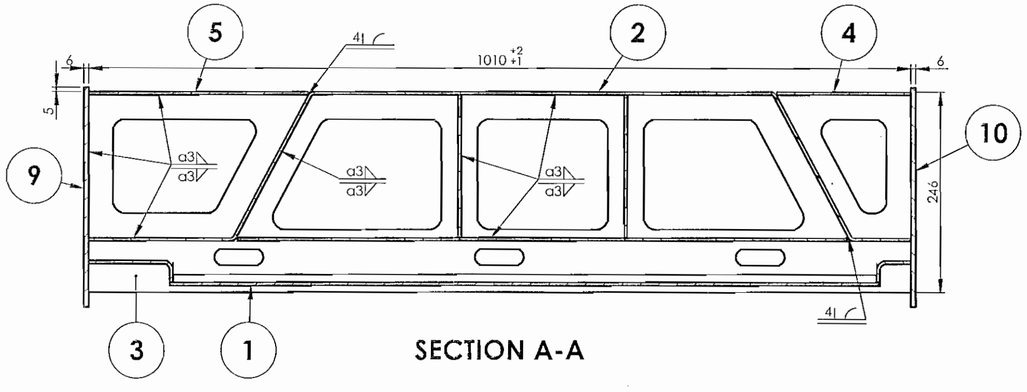

SECTION A-A

NOTE:

1. WELDING SYMBOLS SHALL BE AS PER EN ISO-2553.
2. ALL WELD PERFORMANCE CLASS SHALL BE CP C2 UNLESS OTHERWISE SPECIFIED.
3. FOR WELD TEST PREFERENCES REFER DRG.No. ICF/STD-9-0-998.
4. FOR WELD PROCEDURE SPECIFICATION REFER DRG.No. ICF/STD-9-0-999.
5. WELD JOINT PREPARATION SHALL BE AS PER EN ISO 9692.
6. REMOVE ALL SPATTERS AFTER WELDING.

QTY.	DESCRIPTION	DIMENSIONS	ITEM NO.	REF.DRGS.	MATL	WT/UNIT IN KGS	REMARKS
1	PLATE		10	AAB12151		4.36	
1	PLATE		9	AAB12150		4.36	
1	RIB		8	AAB12157		0.65	
1	RIB		7	AAB12158		0.42	
2	RIB		6	AAB12152		0.44	
1	PLATE		5	AAB12155		2.03	
1	PLATE		4	AAB12156		1.24	
1	DOORWAY BOTTOM PLATE		3	AAB12159		4.69	
1	DOORWAY VERTICAL PLATE		2	AAB12153		11.03	
1	FOOT PLATE ASSY.		1	A0112006		9.75	

GROUP: 1-2 | SURFACE AREA IN Sq.m.: | WT/ASSY IN Kgs:

DOORWAY ASSY

SCALE 1:5	SSE/D	
	CHD	
ALT a	ALTD	S MUTHUKUMARAN
	DRN	S MUTHUKUMARAN

VBS/DTC/CN

INDIAN RAILWAY STANDARDS
INTEGRAL COACH FACTORY, CHENNAI - 600038

SHEET 1 OF 1

A0112007 A2

09-12-2025	14-06-2024	
DATE OF LATEST ALT.	DATE OF FIRST ISSUE	AME/SME

REF.DRG.NO.

ALL DIMENSIONS ARE IN mm UNLESS OTHERWISE SPECIFIED. FOR UNTOLERANCED DIMENSIONS AND ROUGHNESS VALUES, REFER DRAWING NO. ICF/STD-9-0-001.
ANY MANUAL ALTERATION SHALL AUTOMATICALLY RENDER THIS DRAWING INVALID. WELDING SYMBOLS ARE AS PER EN ISO 2553. WEIGHT GIVEN IN DRAWING IS FOR INDICATIVE PURPOSE ONLY

A0112008

▽ ROUGH MACHINED	(01) ROUGH CLEANED
▽▽ FINISH MACHINED	(01a) BURRS REMOVED
▽▽▽ FINE FINISH MACHINED	(18) CHAMFERED

REVISIONS			
ALT.	ZONE	DESCRIPTION	APPROVED & DATE

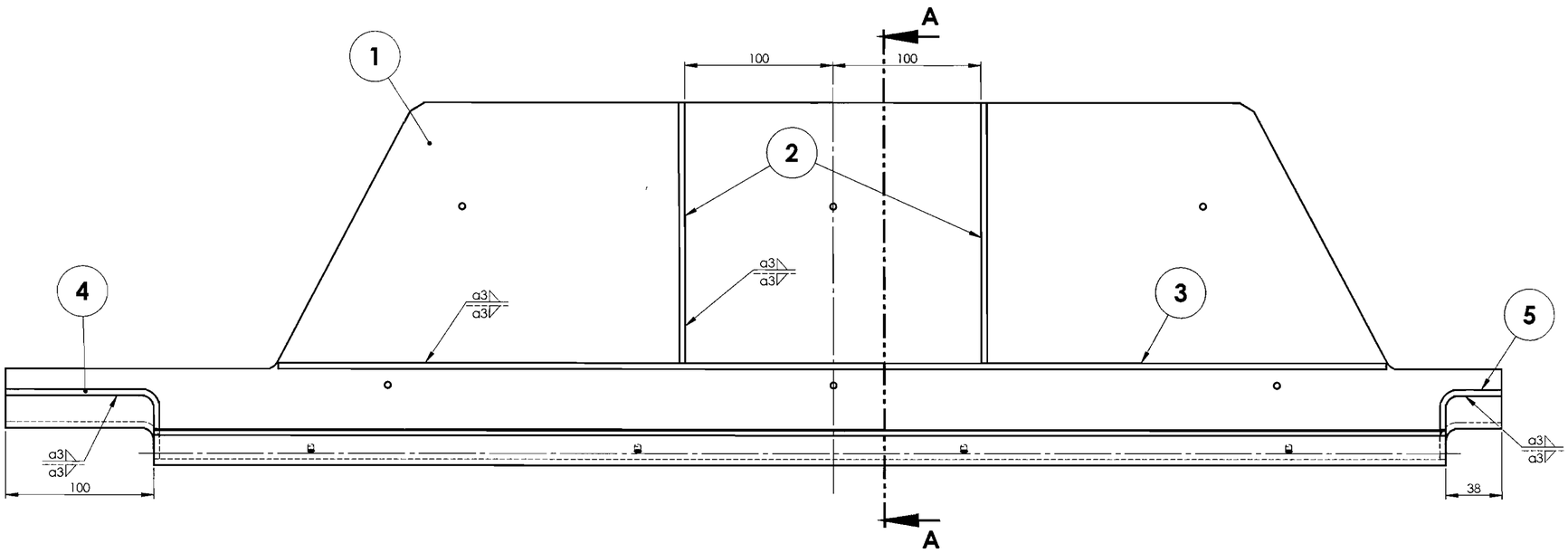

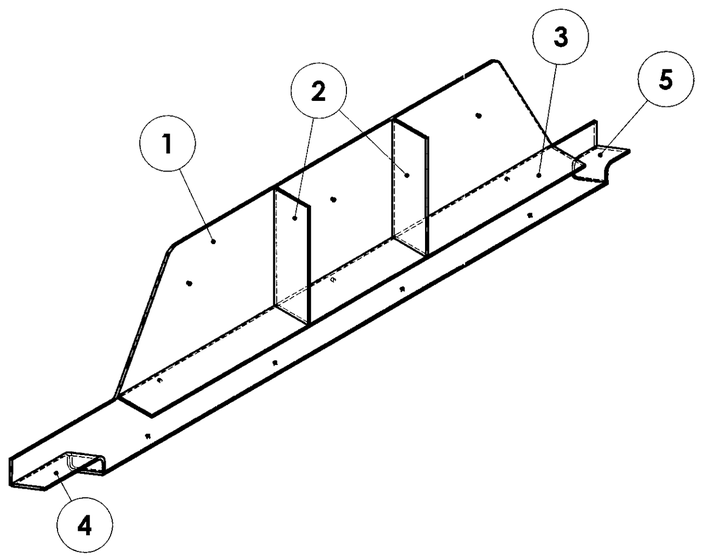

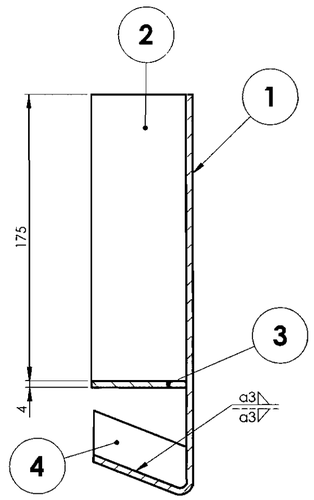

SECTION A-A
SCALE 1 : 2.5

NOTE:

1. WELDING SYMBOLS SHALL BE AS PER EN ISO-2553.
2. ALL WELD PERFORMANCE CLASS SHALL BE CP C2 UNLESS OTHERWISE SPECIFIED.
3. FOR WELD TEST PREFERENCES REFER DRG.No. ICF/STD-9-0-998.
4. FOR WELD PROCEDURE SPECIFICATION REFER DRG.No. ICF/STD-9-0-999.
5. WELD JOINT PREPARATION SHALL BE AS PER EN ISO 9692.
6. REMOVE ALL SPATTERS AFTER WELDING.

QTY.	DESCRIPTION	DIMENSIONS	ITEM NO.	REF.DRGS.	MATL	WT/UNIT IN KGS	REMARKS
1	ANGLE		5	AAB12167		0.11	
1	ANGLE		4	AAB12166		0.23	
1	PLATE		3	AAB12163		1.39	
2	RIB		2	AAB12162		0.32	
1	FOOT STEP PLATE		1	AAB12161		7.39	

GROUP: 1-2 Head Stock | SURFACE AREA IN Sq.m.: | WT/ASSY IN Kgs:

FOOT PLATE ASSY.

SCALE 1:5 | SSE/D | CHD | ALT - | ALTD | DRN: MUTHU KUMARAN S

INDIAN RAILWAY STANDARDS
INTEGRAL COACH FACTORY, CHENNAI - 600038

SHEET 1 OF 1

VBS/DTC/CN

A0112008 A2

DATE OF LATEST ALT.	28-06-2024 DATE OF FIRST ISSUE	AME/SME

REF.DRG.NO.

ALL DIMENSIONS ARE IN mm UNLESS OTHERWISE SPECIFIED. FOR UNTOLERANCED DIMENSIONS AND ROUGHNESS VALUES, REFER DRAWING NO. ICF/STD-9-0-001.
ANY MANUAL ALTERATION SHALL AUTOMATICALLY RENDER THIS DRAWING INVALID. WELDING SYMBOLS ARE AS PER EN ISO 2553. WEIGHT GIVEN IN DRAWING IS FOR INDICATIVE PURPOSE ONLY

A0112009

ROUGH MACHINED	(01) ROUGH CLEANED
FINISH MACHINED	(01b) BURRS REMOVED
FINE FINISH MACHINED	(18) CHAMFERED

REVISIONS			
ALT.	ZONE	DESCRIPTION	APPROVED & DATE
a		ASSEMBLY UPDATED AS PER PARTS	

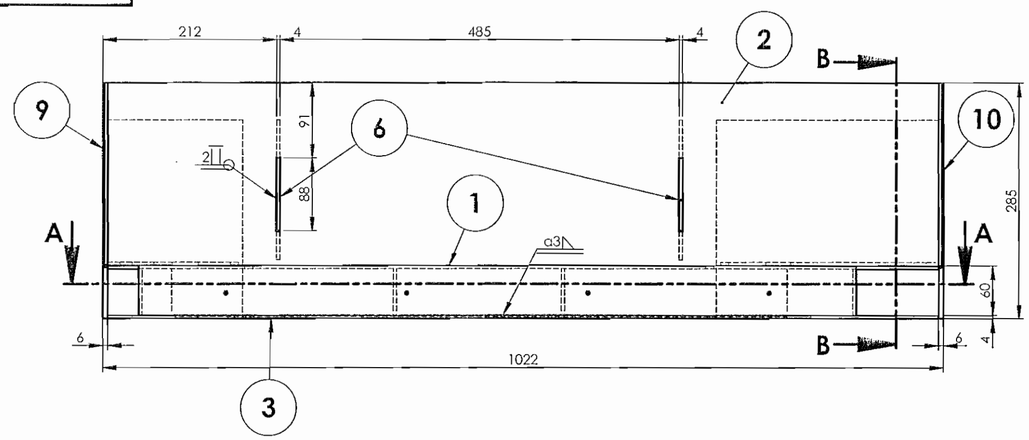

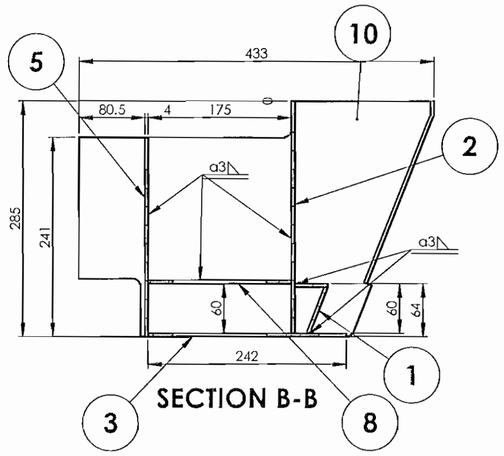

SECTION B-B

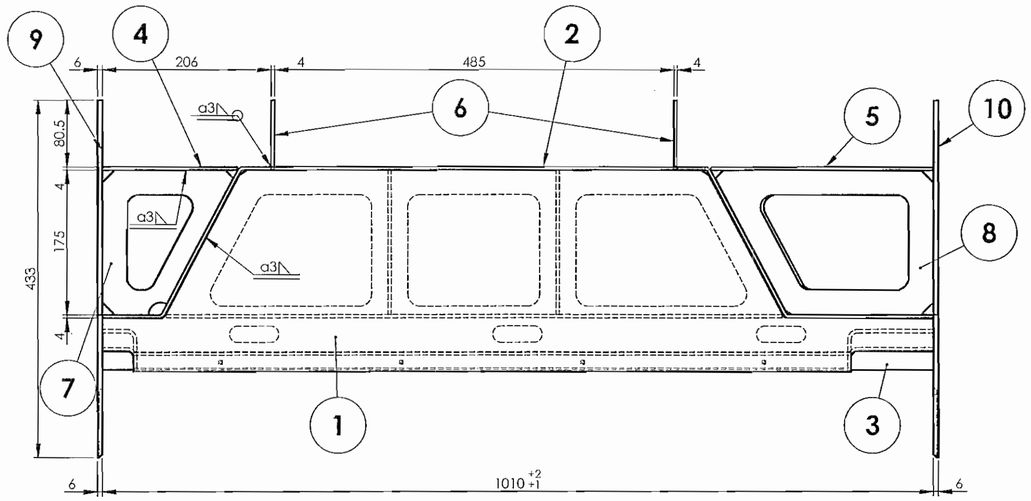

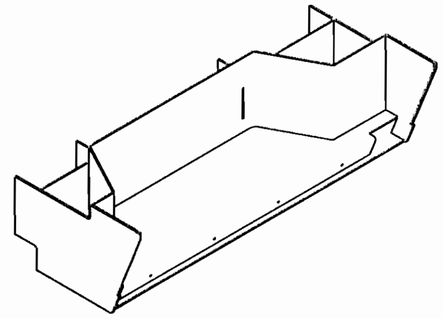

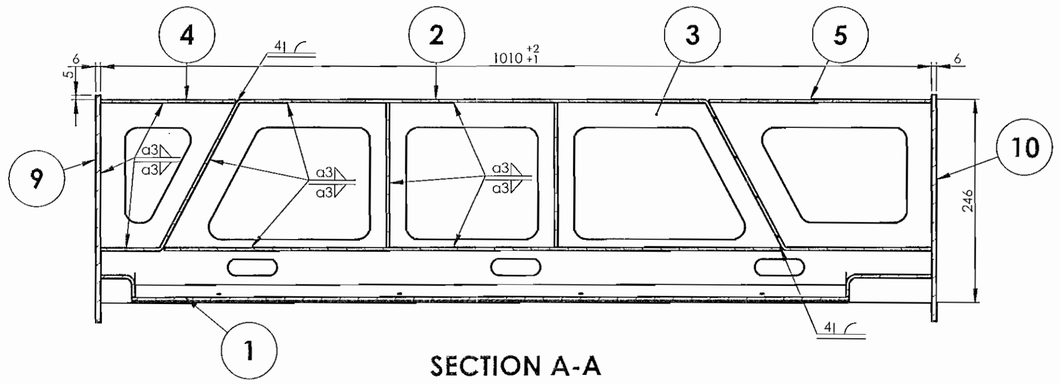

SECTION A-A

NOTE:

1. WELDING SYMBOLS SHALL BE AS PER EN ISO-2553.
2. ALL WELD PERFORMANCE CLASS SHALL BE CP C2 UNLESS OTHERWISE SPECIFIED.
3. FOR WELD TEST PREFERENCES REFER DRG.No. ICF/STD-9-0-998.
4. FOR WELD PROCEDURE SPECIFICATION REFER DRG.No. ICF/STD-9-0-999.
5. WELD JOINT PREPARATION SHALL BE AS PER EN ISO 9692.
6. REMOVE ALL SPATTERS AFTER WELDING.

QTY.	DESCRIPTION	DIMENSIONS	ITEM NO.	REF.DRGS.	MAT'L	WT/UNIT IN KGS	REMARKS
1	PLATE		10	AAB12151		4.36	
1	PLATE		9	AAB12150		4.36	
1	RIB		8	AAB12157		0.65	
1	RIB		7	AAB12158		0.42	
2	RIB		6	AAB12152		0.44	
1	PLATE		5	AAB12155		2.03	
1	PLATE		4	AAB12156		1.24	
1	DOORWAY BOTTOM PLATE		3	AAB12159		4.69	
1	DOORWAY VERTICAL PLATE		2	AAB12154		11.03	
1	FOOT PLATE ASSY.		1	A0112008			

GROUP: 1-2 | SURFACE AREA IN Sq.m.: | WT/ASSY IN Kgs:

DOORWAT ASSY.

SCALE 1:5	SSE/D	
	CHD	
ALT a	ALTD	MUTHU KUMARAN S
	DRN	MUTHU KUMARAN S

VBS/DTC/CN

INDIAN RAILWAY STANDARDS
INTEGRAL COACH FACTORY, CHENNAI - 600038

SHEET 1 OF 1

A0112009 A2

10-12-225	12-06-2024	
DATE OF LATEST ALT.	DATE OF FIRST ISSUE	AME/SME

REF.DRG.NO.

ALL DIMENSIONS ARE IN mm UNLESS OTHERWISE SPECIFIED. FOR UNTOLERANCED DIMENSIONS AND ROUGHNESS VALUES, REFER DRAWING NO. ICF/STD-9-0-001.
ANY MANUAL ALTERATION SHALL AUTOMATICALLY RENDER THIS DRAWING INVALID. WELDING SYMBOLS ARE AS PER EN ISO 2553. WEIGHT GIVEN IN DRAWING IS FOR INDICATIVE PURPOSE ONLY

A0112010

ROUGH MACHINED	(01) ROUGH CLEANED
FINISH MACHINED	(01b) BURRS REMOVED
FINE FINISH MACHINED	(18) CHAMFERED

REVISIONS			
ALT.	ZONE	DESCRIPTION	APPROVED & DATE

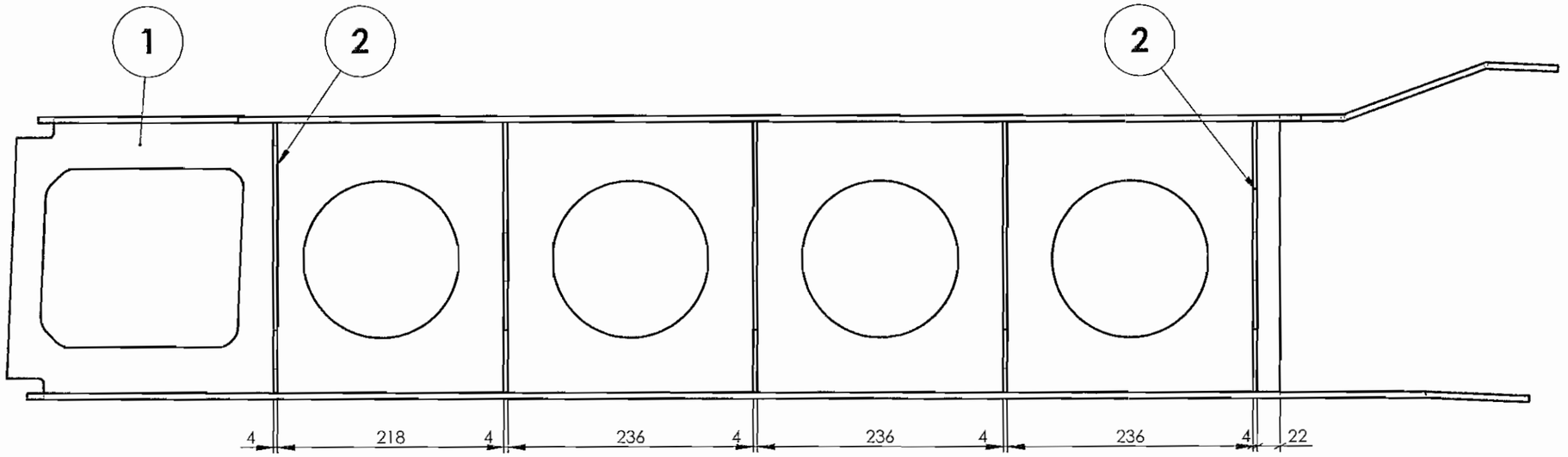

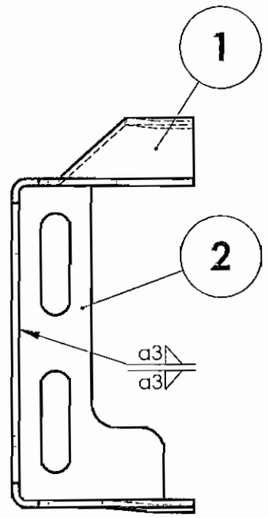

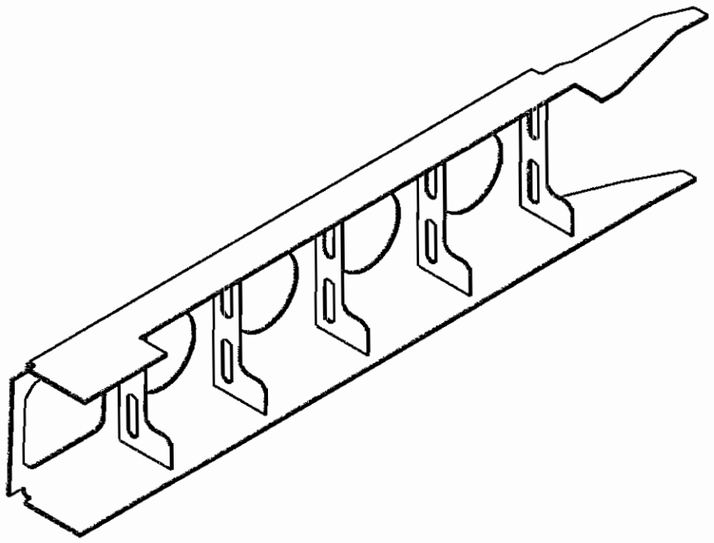

ALL DIMENSIONS ARE IN mm UNLESS OTHERWISE SPECIFIED. FOR UNTOLERANCED DIMENSIONS AND ROUGHNESS VALUES, REFER DRAWING NO ICF/STD-9-0-001.
ANY MANUAL ALTERATION SHALL AUTOMATICALLY RENDER THIS DRAWING INVALID. WELDING SYMBOLS ARE AS PER EN ISO 2553.
WEIGHT GIVEN IN DRAWING IS FOR INDICATIVE PURPOSE ONLY

REF.DRG.NO.-

5	PLATE		2	AAB12129		0.48	
1	BRACKET		1	AAB12127		25.51	
QTY.	DESCRIPTION	DIMENSIONS	ITEM NO.	REF.DRGS.	MATL	WT/UNIT IN KGS	REMARKS

GROUP: 1-2 Head Stock | SURFACE AREA IN Sq.m.:1302210.32 | WT/ASSY IN Kgs:

CHANNEL ASSY.

SCALE	SSE/D	
1:10	CHD	
ALT. -	ALTD	
	DRN	S MUTHUKUMARAN

INDIAN RAILWAY STANDARDS
INTEGRAL COACH FACTORY, CHENNAI - 600038

SHEET 1 OF 1

VBS/DTC/CN

A0112010 A3

DATE OF LATEST ALT.	DATE OF FIRST ISSUE	AME/SME
	26-11-2025	

A0112011

▽ ROUGH MACHINED	(01) ROUGH CLEANED
▽▽ FINISH MACHINED	(01b) BURRS REMOVED
▽▽▽ FINE FINISH MACHINED	(18) CHAMFERED

REVISIONS			
ALT.	ZONE	DESCRIPTION	APPROVED & DATE

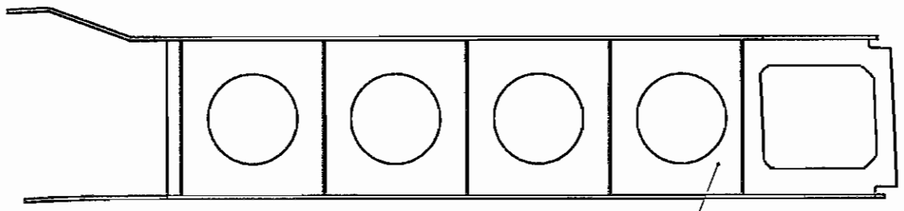

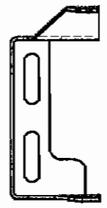

THIS ITEM IS OPPOSITE TO THE ITEM No A0112010
SO REFER THE DRG. FOR DETAILS.

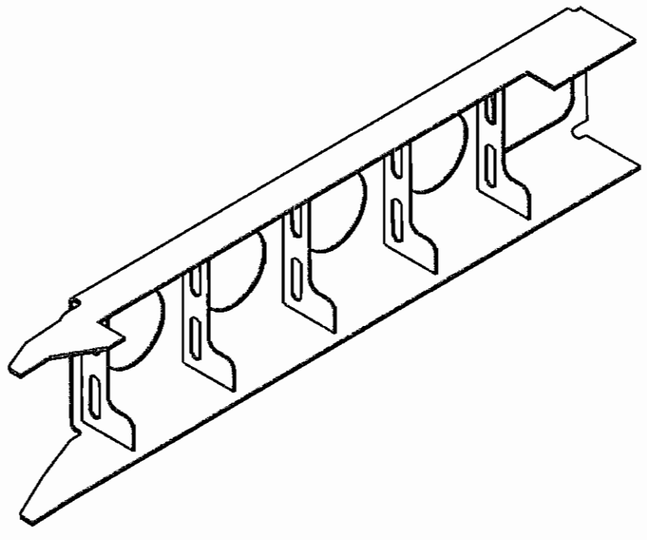

ALL DIMENSIONS ARE IN mm UNLESS OTHERWISE SPECIFIED. FOR UNTOLERANCED DIMENSIONS AND ROUGHNESS VALUES, REFER DRAWING NO ICF/STD-9-0-001.
ANY MANUAL ALTERATION SHALL AUTOMATICALLY RENDER THIS DRAWING INVALID. WELDING SYMBOLS ARE AS PER EN ISO 2553.
WEIGHT GIVEN IN DRAWING IS FOR INDICATIVE PURPOSE ONLY

QTY.	DESCRIPTION	DIMENSIONS	ITEM NO	REF.DRGS.	MATL	WT/UNIT IN KGS	REMARKS
5	PLATE		2	AAB12129		0.48	
1	BRACKET		1	AAB12128		25.39	

GROUP: 1-2 Head Stock | SURFACE AREA IN Sq.m.:1297227.18 | WT/ASSY IN Kgs:

CHANNEL ASSY.

SCALE	SSE/D	
1:20	CHD	
ALT. -	ALTD	
	DRN	S MUTHUKUMARAN

INDIAN RAILWAY STANDARDS
INTEGRAL COACH FACTORY, CHENNAI - 600038

SHEET 1 OF 1

VBS/DTC/CN

A0112011 A3

DATE OF LATEST ALT.	DATE OF FIRST ISSUE	AME/SME
	26-11-2025	

REF.DRG.NO.-

A0112012

∇ ROUGH MACHINED	(01) ROUGH CLEANED
∇∇ FINISH MACHINED	(01b) BURRS REMOVED
∇∇∇ FINE FINISH MACHINED	(18) CHAMFERED

REVISIONS			
ALT.	ZONE	DESCRIPTION	APPROVED & DATE

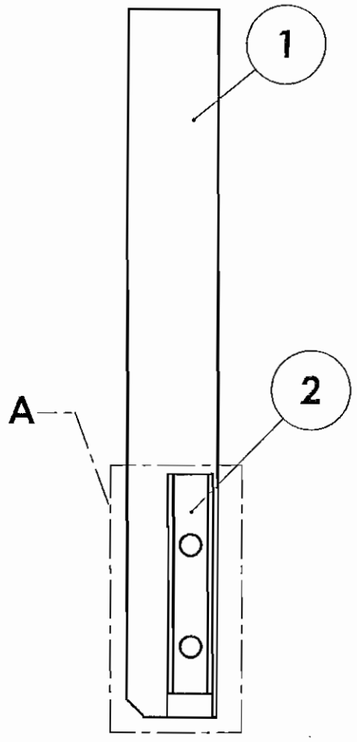

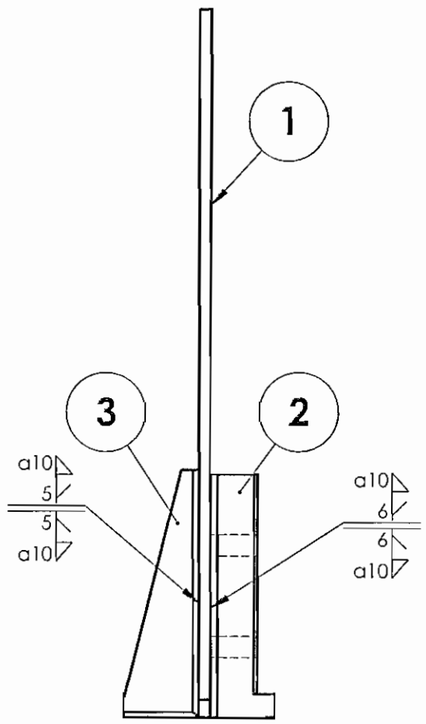

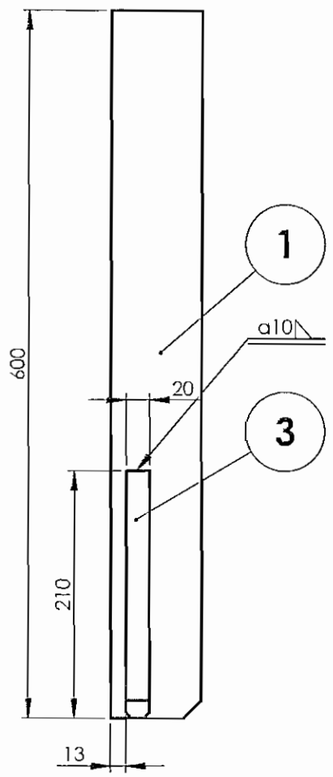

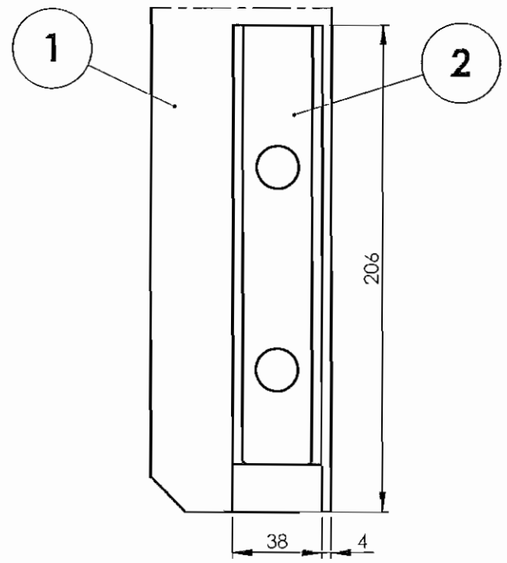

DETAIL A
SCALE 2 : 5

QTY.	DESCRIPTION	DIMENSIONS	ITEM NO.	REF.DRGS.	MATL	WT/UNIT IN KGS	REMARKS
1	RIB		3	AAB12268		1.31	
1	BRACKET		2	AAA12126		2.311	
1	RIB		1	AAB12267		3.62	

GROUP: 1-2 Head Stock | SURFACE AREA IN Sq.m.:169492.36 | WT/ASSY IN Kgs:

BRACKET ASSY

SCALE 1:5	SSE/D	
	CHD	
ALT. -	ALTD	
	DRN	S MUTHUKUMARAN

INDIAN RAILWAY STANDARDS
INTEGRAL COACH FACTORY, CHENNAI - 600038

SHEET 1 OF 1

VBS/DTC/CN

A0112012 | A3

DATE OF LATEST ALT.	DATE OF FIRST ISSUE	AME/SME
	26-11-2025	

REF.DRG.NO.-

ALL DIMENSIONS ARE IN mm UNLESS OTHERWISE SPECIFIED. FOR UNTOLERANCED DIMENSIONS AND ROUGHNESS VALUES, REFER DRAWING NO ICF/STD-9-0-001.
ANY MANUAL ALTERATION SHALL AUTOMATICALLY RENDER THIS DRAWING INVALID. WELDING SYMBOLS ARE AS PER EN ISO 2553.
WEIGHT GIVEN IN DRAWING IS FOR INDICATIVE PURPOSE ONLY

A0112013

▽ ROUGH MACHINED	(01) ROUGH CLEANED
▽▽ FINISH MACHINED	(016) BURRS REMOVED
▽▽▽ FINE FINISH MACHINED	(18) CHAMFERED

REVISIONS			
ALT.	ZONE	DESCRIPTION	APPROVED & DATE

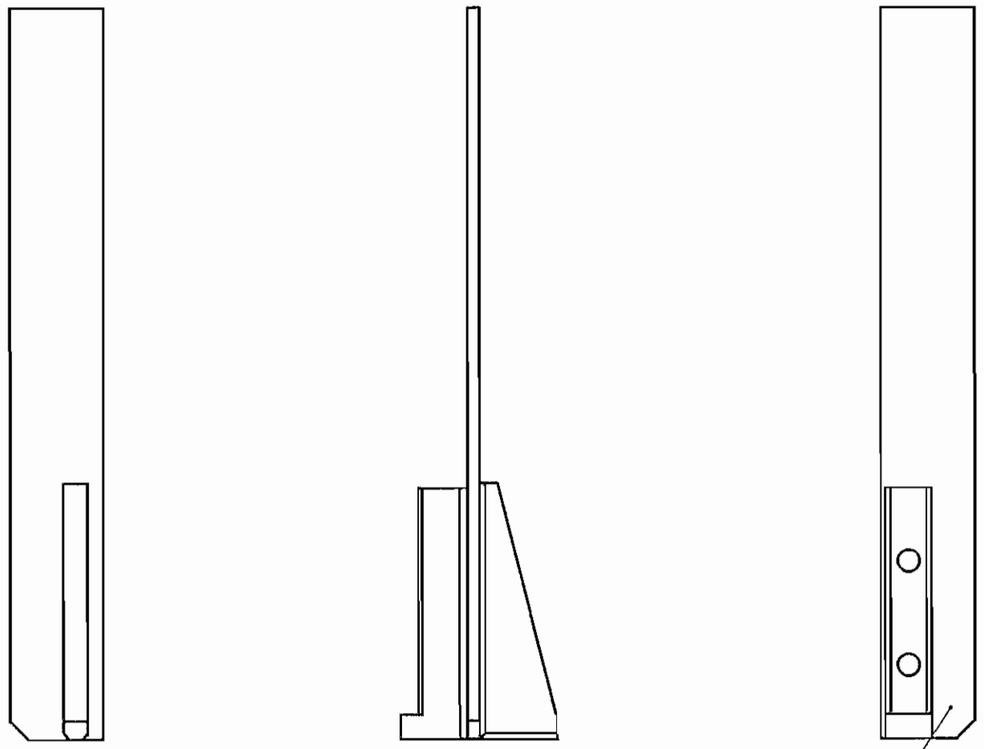

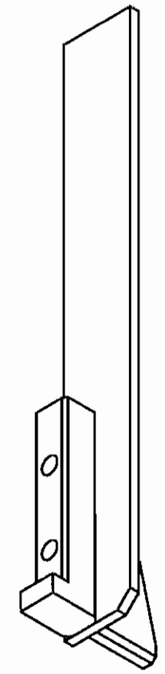

ALL DIMENSIONS ARE IN mm UNLESS OTHERWISE SPECIFIED. FOR UNTOLERANCED DIMENSIONS AND ROUGHNESS VALUES, REFER DRAWING NO ICF/STD-9-0-001.
ANY MANUAL ALTERATION SHALL AUTOMATICALLY RENDER THIS DRAWING INVALID. WELDING SYMBOLS ARE AS PER EN ISO 2553.
WEIGHT GIVEN IN DRAWING IS FOR INDICATIVE PURPOSE ONLY

THIS ITEM IS OPPOSITE TO THE ITEM No A0112012 SO REFER THE DRG. FOR DETAILS.

QTY.	DESCRIPTION	DIMENSIONS	ITEM NO.	REF.DRGS.	MATL	WT/UNIT IN KGS	REMARKS
1	RIB		3	AAB12268		1.31	
1	BRACKET		2	AAA12126		2.311	
1	RIB		1	AAB12267		3.62	

GROUP: 1-2 Head Stock | SURFACE AREA IN Sq.m.:169492.36 | WT/ASSY IN Kgs:

BRACKET ASSY

SCALE 1:5	SSE/D	
	CHD	
ALT. -	ALTD	
	DRN	S MUTHUKUMARAN

INDIAN RAILWAY STANDARDS
INTEGRAL COACH FACTORY, CHENNAI - 600038

SHEET 1 OF 1

VBS/DTC/CN

A0112013 A3

	26-11-2025	
DATE OF LATEST ALT.	DATE OF FIRST ISSUE	AME/SME

REF.DRG.NO.-

A0112014

▽ ROUGH MACHINED	(01) ROUGH CLEANED
▽▽ FINISH MACHINED	(01b) BURRS REMOVED
▽▽▽ FINE FINISH MACHINED	(18) CHAMFERED

REVISIONS			
ALT.	ZONE	DESCRIPTION	APPROVED & DATE

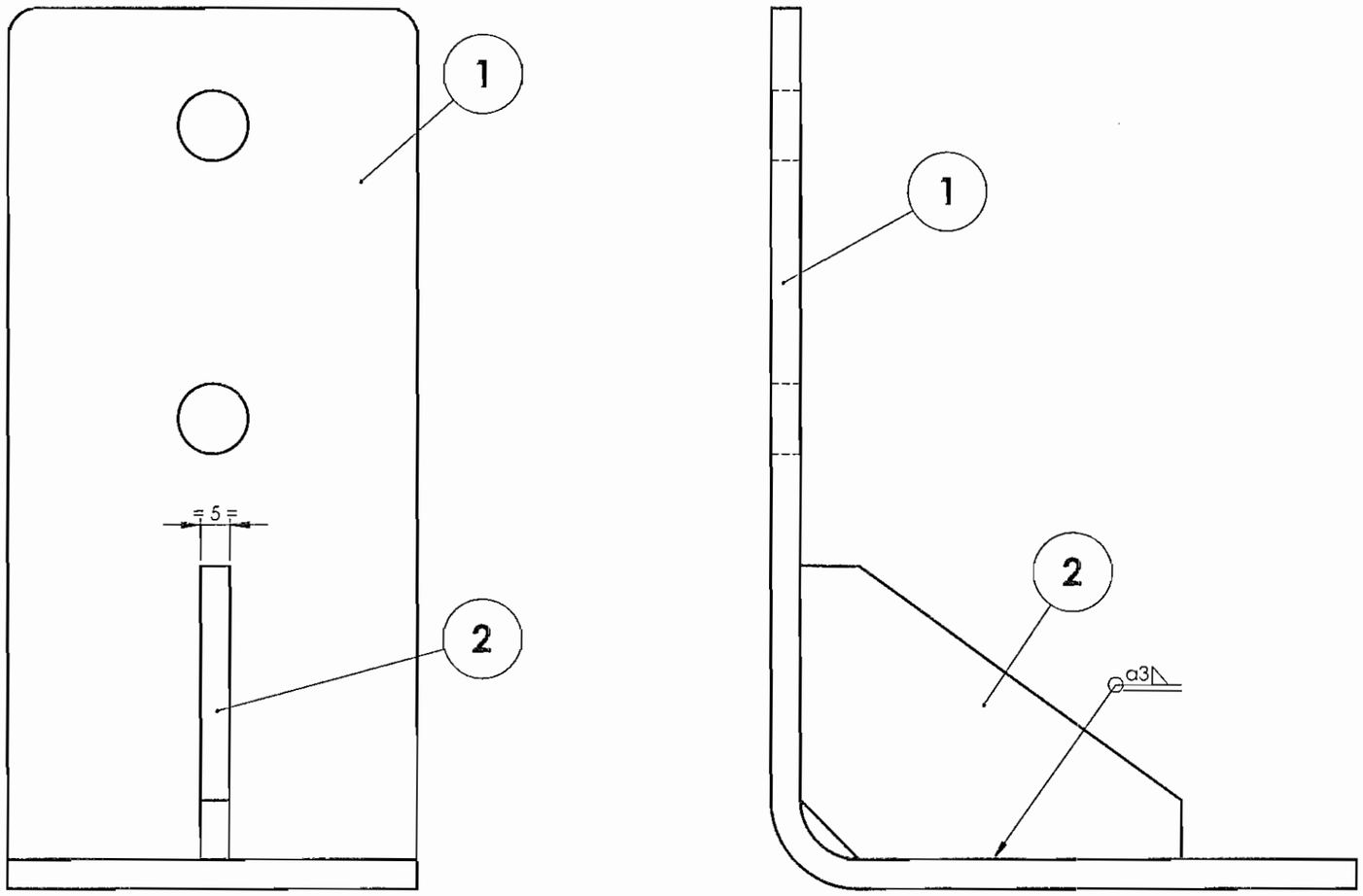

ALL DIMENSIONS ARE IN mm UNLESS OTHERWISE SPECIFIED. FOR UNTOLERANCED DIMENSIONS AND ROUGHNESS VALUES, REFER DRAWING NO ICF/STD-9-0-001.
ANY MANUAL ALTERATION SHALL AUTOMATICALLY RENDER THIS DRAWING INVALID. WELDING SYMBOLS ARE AS PER EN ISO 2553.
WEIGHT GIVEN IN DRAWING IS FOR INDICATIVE PURPOSE ONLY

QTY.	DESCRIPTION	DIMENSIONS	ITEM NO.	REF.DRGS.	MATL	WT/UNIT IN KGS	REMARKS
1	RIB		2	AAB12289		0.08	
1	ANGLE		1	AAB12288		0.65	

GROUP: 1-2 Head Stock | SURFACE AREA IN Sq.m.: | WT/ASSY IN Kgs:

FOOT STEP BRACKET

SCALE	SSE/D	
1:2	CHD	
ALT. -	ALTD	
	DRN	S MUTHUKUMARAN

INDIAN RAILWAY STANDARDS
INTEGRAL COACH FACTORY, CHENNAI - 600038

SHEET 1 OF 1

VBS/DTC/CN

A0112014 | A3

REF.DRG.NO.

DATE OF LATEST ALT.	DATE OF FIRST ISSUE	AME/SME
	26-11-2025	

A0112015

▽ ROUGH MACHINED	(01) ROUGH CLEANED
▽▽ FINISH MACHINED	(01b) BURRS REMOVED
▽▽▽ FINE FINISH MACHINED	(18) CHAMFERED

REVISIONS			
ALT.	ZONE	DESCRIPTION	APPROVED & DATE

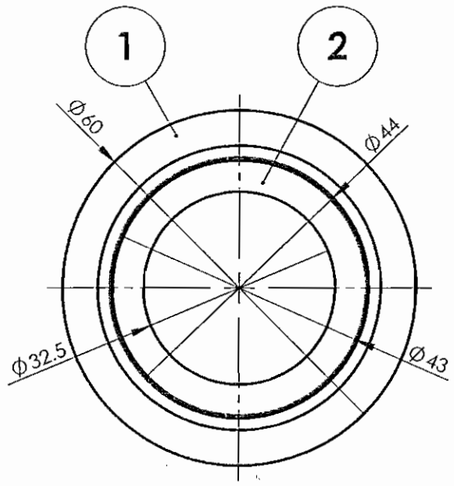

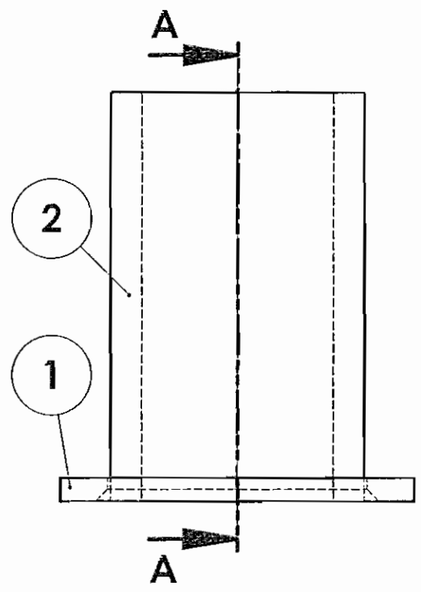

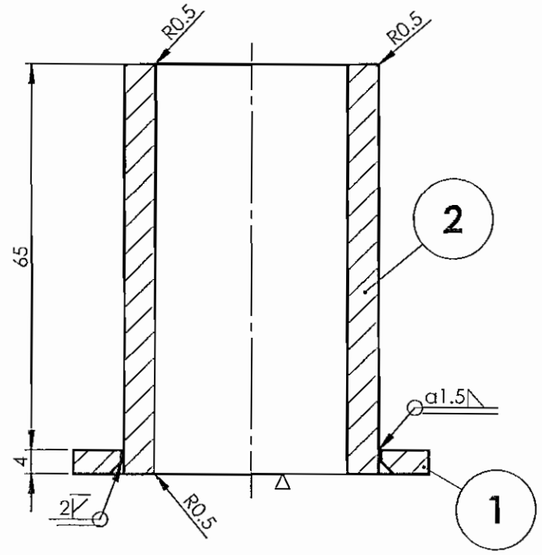

SECTION A-A

QTY.	DESCRIPTION	DIMENSIONS	ITEM NO.	REF.DRGS.	MATL	WT/UNIT IN KGS	REMARKS
1	BOSS		2	AAB12429		0.34	
1	RING		1	AAB12430		0.04	

GROUP: 1-2 Head Stock | SURFACE AREA IN Sq.m.:21302.64 | WT/ASSY IN Kgs:

BOSS ASSEMBLY

SCALE 1:1	SSE/D	
	CHD	
ALT.	ALTD	
	DRN	S MUTHUKUMARAN

INDIAN RAILWAY STANDARDS
INTEGRAL COACH FACTORY, CHENNAI - 600038

SHEET 1 OF 1

VBS/DTC/CN

A0112015 | A3

DATE OF LATEST ALT.	DATE OF FIRST ISSUE	AME/SME
	09-12-2025	

REF.DRG.NO.-

ALL DIMENSIONS ARE IN mm UNLESS OTHERWISE SPECIFIED. FOR UNTOLERANCED DIMENSIONS AND ROUGHNESS VALUES, REFER DRAWING NO ICF/STD-9-0-001.
ANY MANUAL ALTERATION SHALL AUTOMATICALLY RENDER THIS DRAWING INVALID. WELDING SYMBOLS ARE AS PER EN ISO 2553.
WEIGHT GIVEN IN DRAWING IS FOR INDICATIVE PURPOSE ONLY

A0112016

ROUGH MACHINED	(01) ROUGH CLEANED
FINISH MACHINED	(01b) BURRS REMOVED
FINE FINISH MACHINED	(18) CHAMFERED

REVISIONS			
ALT.	ZONE	DESCRIPTION	APPROVED & DATE
a		DESIGN REVISED	

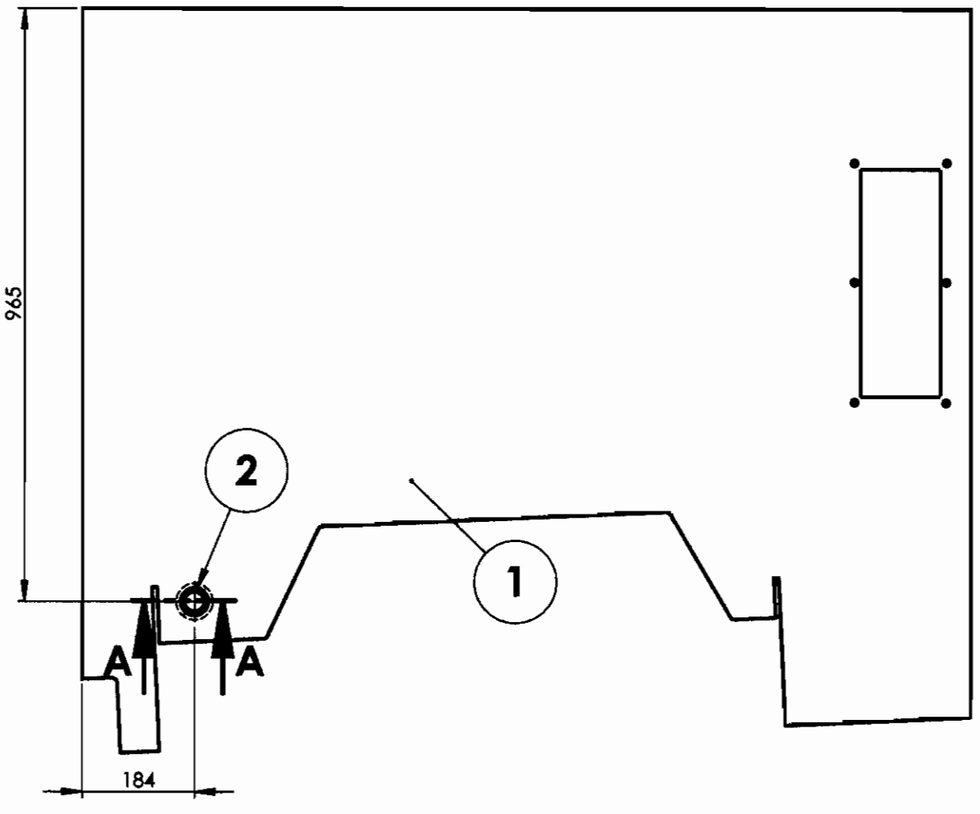

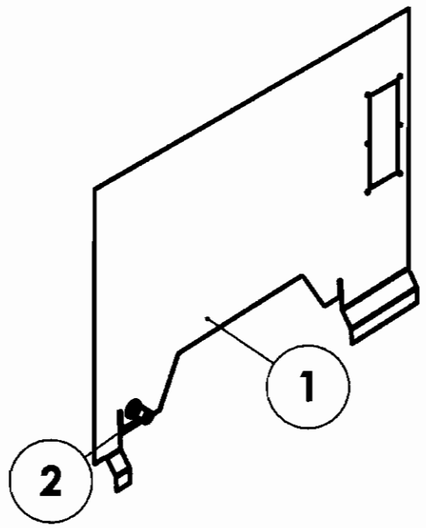

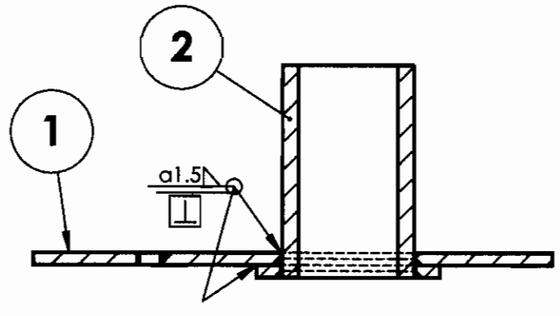

SECTION A-A
SCALE 1 : 2

QTY.	DESCRIPTION	DIMENSIONS	ITEM NO.	REF.DRGS.	MATL	WT/UNIT IN KGS	REMARKS
1	BOSS ASSEMBLY		2	A0112015		0.38	
1	FLOOR SHEET RH		1	AAB12114		43.65	

GROUP: 1-2 Head Stock | SURFACE AREA IN Sq.m.:2779241.37 | WT/ASSY IN Kgs:

TOP PLATE ASSEMBLY

SCALE 1:10	SSE/D	
	CHD	
ALT. a	ALTD	S MUTHUKUMARAN
	DRN	S MUTHUKUMARAN

INDIAN RAILWAY STANDARDS
INTEGRAL COACH FACTORY, CHENNAI - 600038

SHEET 1 OF 1

VBS/DTC/CN

A0112016 A3

13-03-2026	09-12-2025	
DATE OF LATEST ALT.	DATE OF FIRST ISSUE	AME/SME

REF.DRG.NO.-

ALL DIMENSIONS ARE IN mm UNLESS OTHERWISE SPECIFIED. FOR UNTOLERANCED DIMENSIONS AND ROUGHNESS VALUES, REFER DRAWING NO ICF/STD-9-0-001.
ANY MANUAL ALTERATION SHALL AUTOMATICALLY RENDER THIS DRAWING INVALID. WELDING SYMBOLS ARE AS PER EN ISO 2553.
WEIGHT GIVEN IN DRAWING IS FOR INDICATIVE PURPOSE ONLY

A0112017

▽ ROUGH MACHINED	(01) ROUGH CLEANED
▽▽ FINISH MACHINED	(01b) BURRS REMOVED
▽▽▽ FINE FINISH MACHINED	(18) CHAMFERED

REVISIONS			
ALT.	ZONE	DESCRIPTION	APPROVED & DATE
a		DESIGN REVISED	

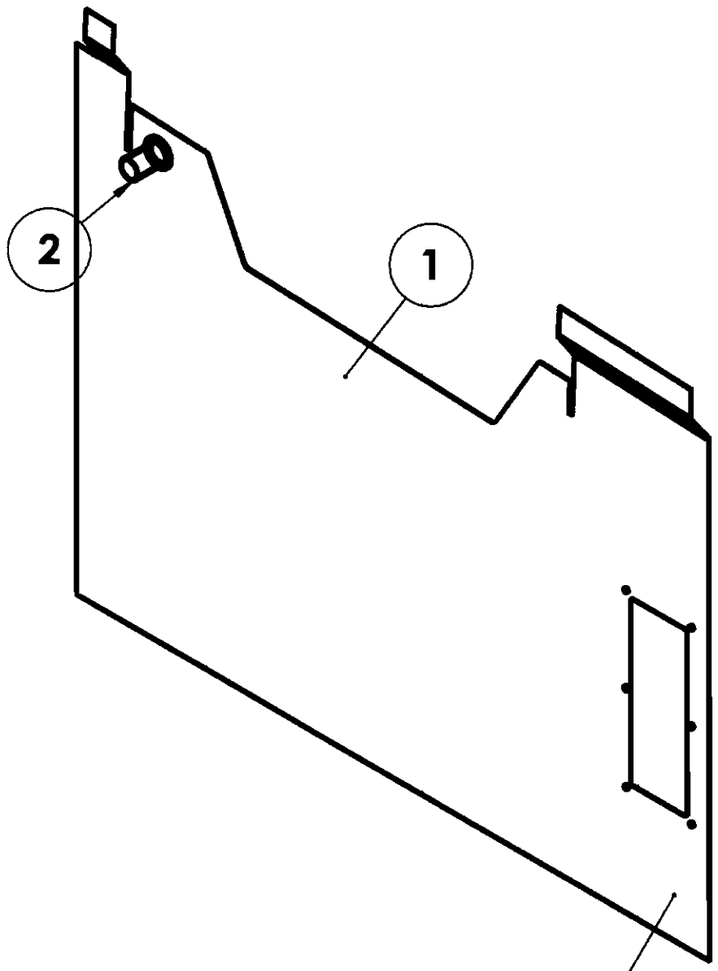

THIS ITEM IS OPPOSITE TO THE ITEM No A0112016 SO REFER THE DRG. FOR DETAILS.

ALL DIMENSIONS ARE IN mm UNLESS OTHERWISE SPECIFIED. FOR UNTOLERANCED DIMENSIONS AND ROUGHNESS VALUES, REFER DRAWING NO ICF/STD-9-0-001.
ANY MANUAL ALTERATION SHALL AUTOMATICALLY RENDER THIS DRAWING INVALID. WELDING SYMBOLS ARE AS PER EN ISO 2553.
WEIGHT GIVEN IN DRAWING IS FOR INDICATIVE PURPOSE ONLY

QTY.	DESCRIPTION	DIMENSIONS	ITEM NO.	REF.DRGS.	MATL	WT/UNIT IN KGS	REMARKS
1	BOSS ASSEMBLY		2	A0112015		0.38	
1	FLOOR SHEET LH		1	AAB12115		43.65	

GROUP: 1-2 Head Stock | SURFACE AREA IN Sq.m.:2779241.37 | WT/ASSY IN Kgs:

TOP PLATE ASSEMBLY

SCALE 1:10	SSE/D	
	CHD	
ALT. a	ALTD	S MUTHUKUMARAN
	DRN	S MUTHUKUMARAN

INDIAN RAILWAY STANDARDS
INTEGRAL COACH FACTORY, CHENNAI - 600038

SHEET 1 OF 1

VBS/DTC/CN

A0112017 A3

REF.DRG.NO.-	13-03-2026	09-12-2025	AME/SME
	DATE OF LATEST ALT.	DATE OF FIRST ISSUE	

A0112018

ROUGH MACHINED	(01) ROUGH CLEANED
FINISH MACHINED	(01b) BURRS REMOVED
FINE FINISH MACHINED	(18) CHAMFERED

REVISIONS			
ALT.	ZONE	DESCRIPTION	APPROVED & DATE

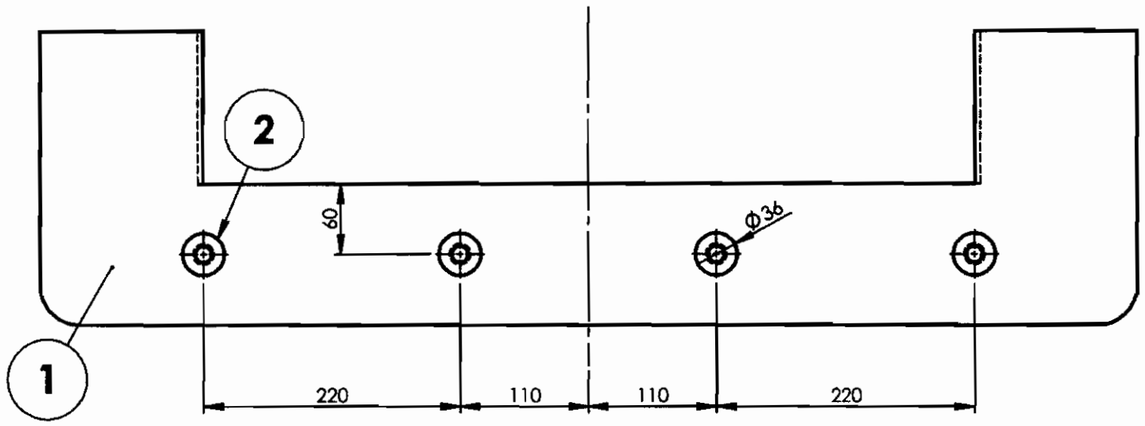

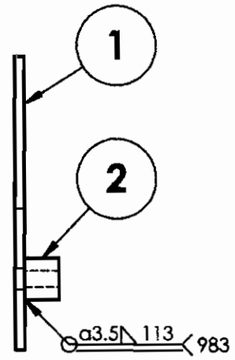

ALL DIMENSIONS ARE IN mm UNLESS OTHERWISE SPECIFIED. FOR UNTOLERANCED DIMENSIONS AND ROUGHNESS VALUES, REFER DRAWING NO ICF/STD-9-0-001.
ANY MANUAL ALTERATION SHALL AUTOMATICALLY RENDER THIS DRAWING INVALID. WELDING SYMBOLS ARE AS PER EN ISO 2553.
WEIGHT GIVEN IN DRAWING IS FOR INDICATIVE PURPOSE ONLY

QTY.	DESCRIPTION	DIMENSIONS	ITEM NO.	REF.DRGS.	MATL	WT/UNIT IN KGS	REMARKS
4	BOSS		2	AAB12443		0.20	
1	BRACKET		1	AAB12442		9.25	

GROUP: 1-2 Head Stock | SURFACE AREA IN Sq.m.:343346.33 | WT/ASSY IN Kgs:

BRACKET ASSEMBLY

SCALE 1:10	SSE/D	
	CH-D	
ALT. -	ALT'D	
	DRN	S MUTHU KUMARAN

INDIAN RAILWAY STANDARDS
INTEGRAL COACH FACTORY, CHENNAI - 600038

SHEET 1 OF 1

VBS/DTC/CN

A0112018 A3

REF.DRG.NO.-			
	19-03-2026		
DATE OF LATEST ALT.	DATE OF FIRST ISSUE	AME/SME	

A0112019

▽ ROUGH MACHINED	(01) ROUGH CLEANED
▽▽ FINISH MACHINED	(01b) BURRS REMOVED
▽▽▽ FINE FINISH MACHINED	(18) CHAMFERED

REVISIONS			
ALT.	ZONE	DESCRIPTION	APPROVED & DATE

TO BE ENSURE BEFORE WELDING BOTH ITEMS-1 & 2 HOLES ARE CONCENTRIC
THREADED HOLES TO BE SUITABLY PROTECTED.

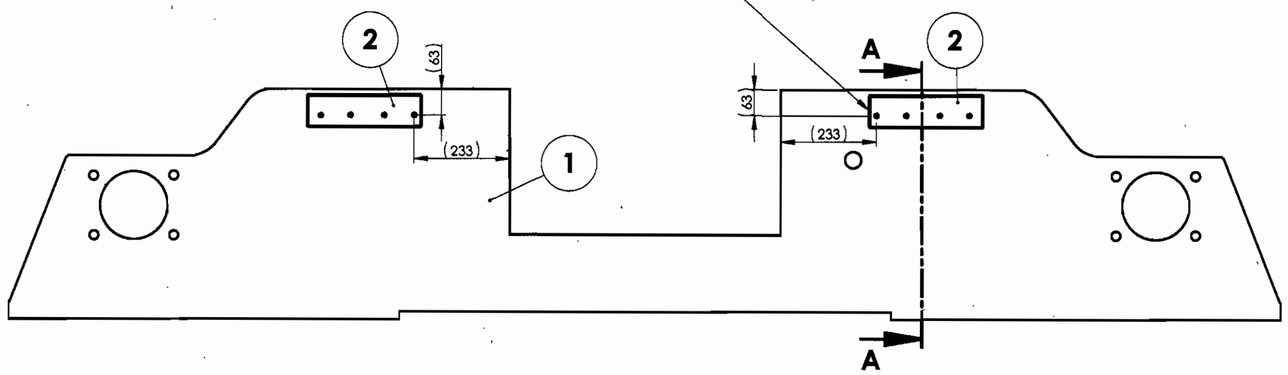

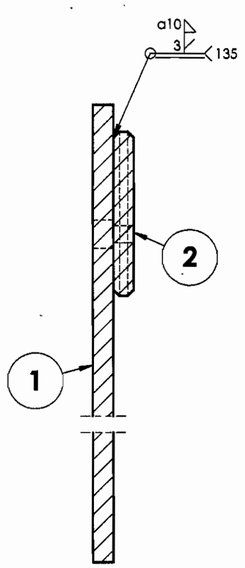

SECTION A-A
SCALE 1 : 2

ALL DIMENSIONS ARE IN mm UNLESS OTHERWISE SPECIFIED. FOR UNTOLERANCED DIMENSIONS AND ROUGHNESS VALUES. REFER DRAWING NO ICF/STD-9-0-001.
ANY MANUAL ALTERATION SHALL AUTOMATICALLY RENDER THIS DRAWING INVALID. WELDING SYMBOLS ARE AS PER EN ISO 2553. WEIGHT GIVEN IN DRAWING IS FOR INDICATIVE PURPOSE ONLY

REF.DRG.NO.-

QTY.	DESCRIPTION	DIMENSIONS	ITEM NO.	REF.DRGS.	MATL	WT/UNIT IN KGS	REMARKS
2	PLATE		2	AAB12448		1.69	
1	END PLATE		1	AAB12259		94.91	

GROUP: 1-2 Head Stock | SURFACE AREA IN Sq.m.: 2614116.95 | WT/ASSY IN Kgs:

END PLATE ASSEMBLY

	09-06-2026	
DATE OF LATEST ALT.	DATE OF FIRST ISSUE	AME/SME

INDIAN RAILWAY STANDARDS
INTEGRAL COACH FACTORY, CHENNAI - 600038

SHEET 1 OF 1

SCALE 1:10	SSE/D
	CHD
ALT	ALTD
	DRN: S MUTHU KUMARAN

VBS/DTC/CN

A0112019 A2

A0112020

▽ ROUGH MACHINED	(01) ROUGH CLEANED
▽▽ FINISH MACHINED	(01b) BURRS REMOVED
▽▽▽ FINE FINISH MACHINED	(18) CHAMFERED

REVISIONS			
ALT.	ZONE	DESCRIPTION	APPROVED & DATE

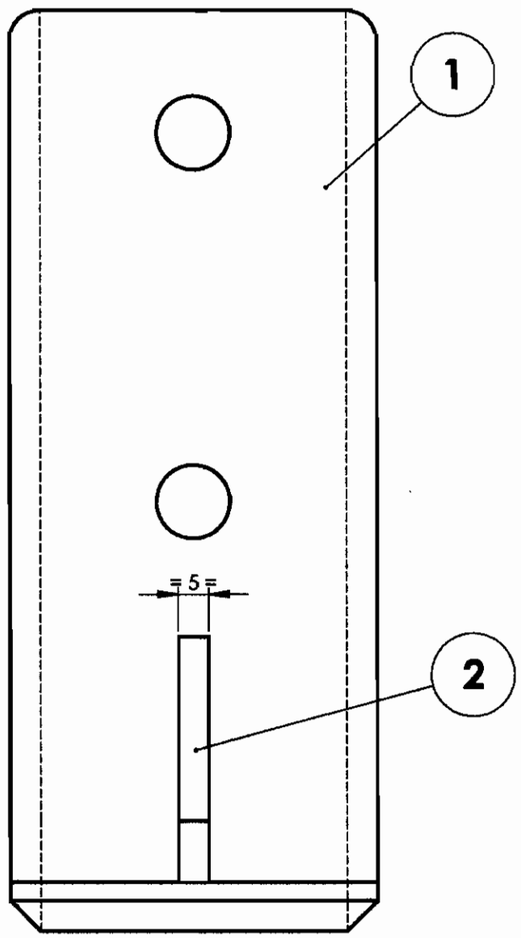

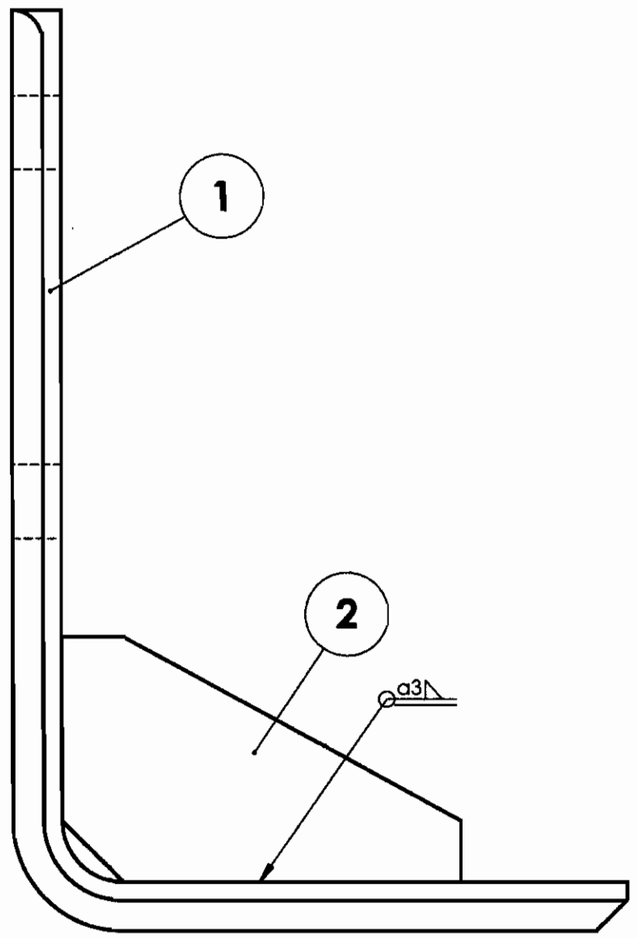

ALL DIMENSIONS ARE IN mm UNLESS OTHERWISE SPECIFIED. FOR UNTOLERANCED DIMENSIONS AND ROUGHNESS VALUES, REFER DRAWING NO ICF/STD-9-0-001.
ANY MANUAL ALTERATION SHALL AUTOMATICALLY RENDER THIS DRAWING INVALID. WELDING SYMBOLS ARE AS PER EN ISO 2553.
WEIGHT GIVEN IN DRAWING IS FOR INDICATIVE PURPOSE ONLY

QTY.	DESCRIPTION	DIMENSIONS	ITEM NO.	REF.DRGS.	MATL	WT/UNIT IN KGS	REMARKS
1	RIB		2	AAB12451		0.07	
1	ANGLE		1	AAB12450		0.82	

GROUP: 1-2 Head Stock | SURFACE AREA IN Sq.m.: | WT/ASSY IN Kgs:

FOOT STEP BRACKET

SCALE 1:2	SSE/D	
	CHD	
ALT. -	ALTD	
	DRN	S MUTHUKUMARAN

INDIAN RAILWAY STANDARDS
INTEGRAL COACH FACTORY, CHENNAI - 600038

SHEET 1 OF 1

VBS/DTC/CN

A0112020 | A3

REF.DRG.NO.	DATE OF LATEST ALT.	DATE OF FIRST ISSUE	AME/SME
		18-06-2026	

A0113001

ROUGH MACHINED	(01) ROUGH CLEANED
FINISH MACHINED	(11b) BURRS REMOVED
FINE FINISH MACHINED	(18) CHAMFERED

REVISIONS			
ALT.	ZONE	DESCRIPTION	APPROVED & DATE

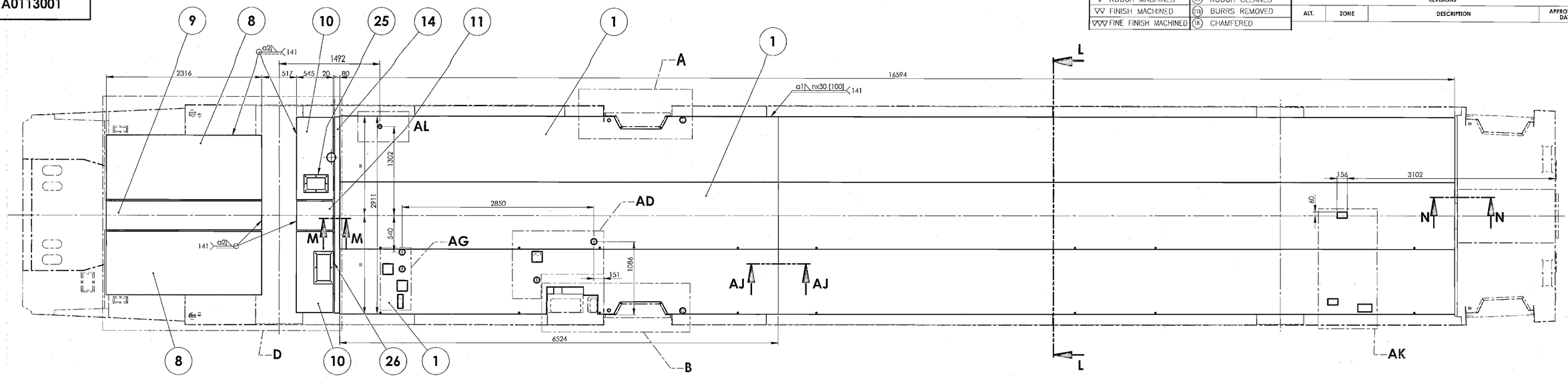

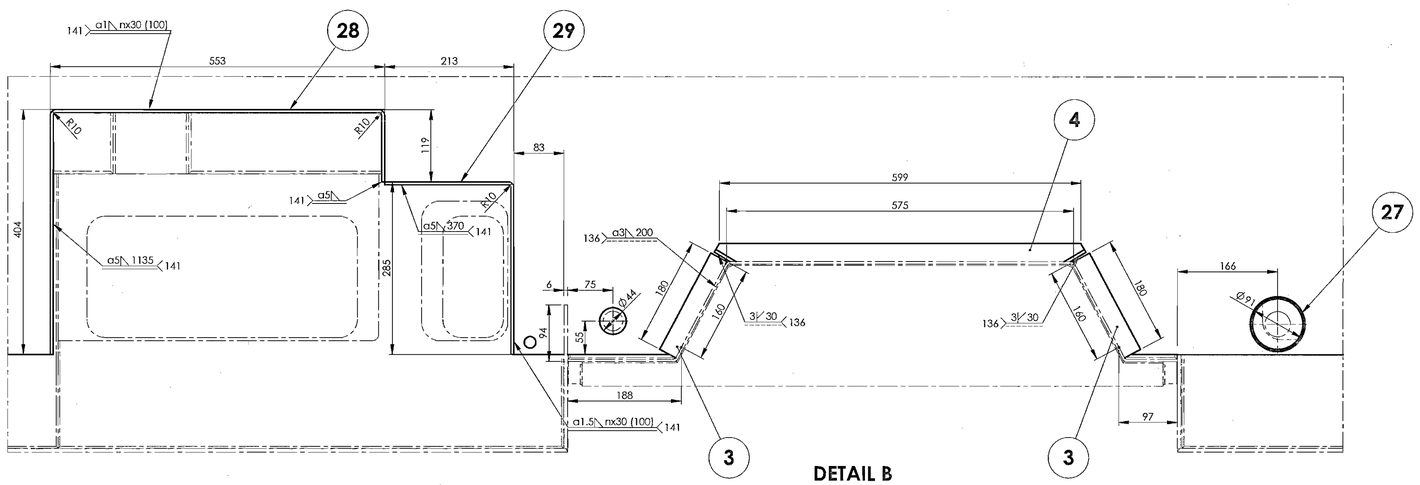

DETAIL B
SCALE 1 : 5

SECTION E-E
SCALE 1 : 2

OVERLAP 30mm GIVEN FOR TROUGH FLOOR BASE DIMENSION.

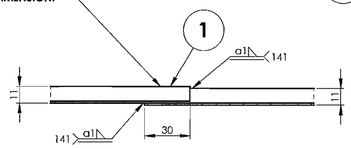

ALL TROUGHS TO BE WELDED WITH CROSS BEARER, CENTRE SILL AND OTHER MEMBERS.

SECTION AJ-AJ
SCALE 1 : 2

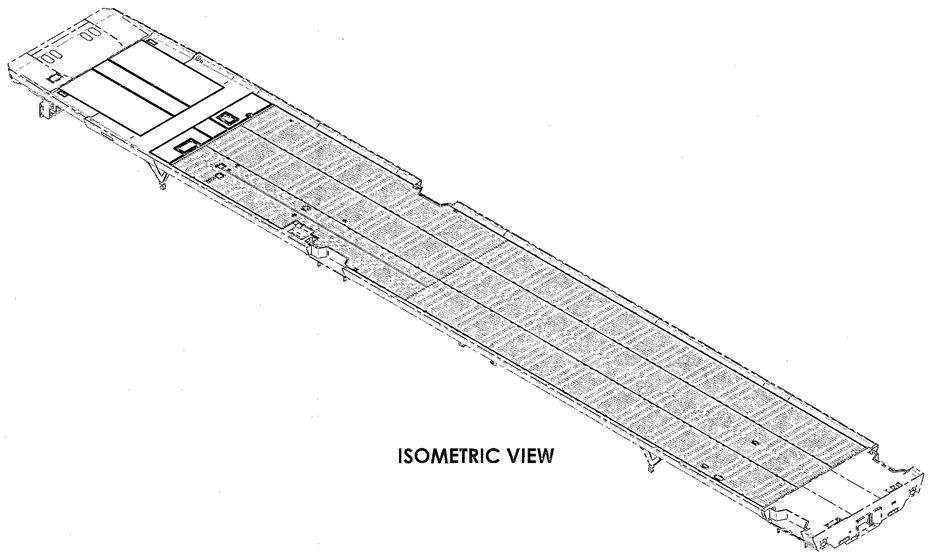

ISOMETRIC VIEW

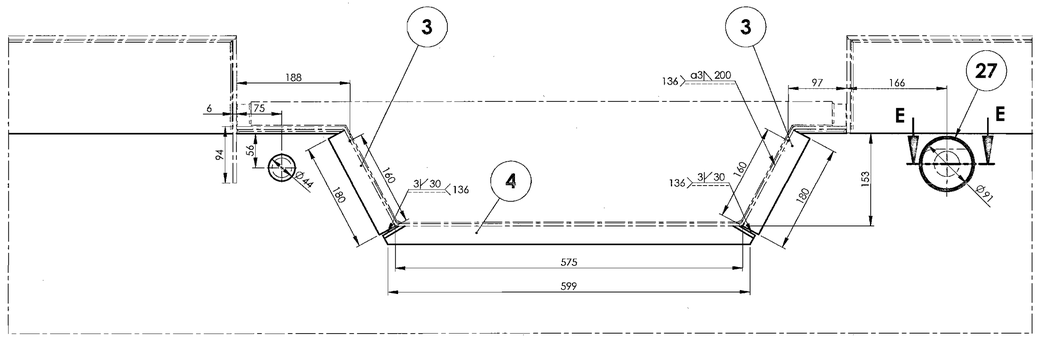

DETAIL A
SCALE 1 : 5

ALL DIMENSIONS ARE IN mm UNLESS OTHERWISE SPECIFIED. FOR UNTOLERANCED DIMENSIONS AND ROUGHNESS VALUES, REFER DRAWING NO ICF/STD-9-0-001.
ANY MANUAL ALTERATION SHALL AUTOMATICALLY RENDER THIS DRAWING INVALID. WELDING SYMBOLS ARE AS PER EN ISO 2553. WEIGHT GIVEN IN DRAWING IS FOR INDICATIVE PURPOSE ONLY.

REF.DRG.NO.-

GROUP: 1-3 Trough Floor | SURFACE AREA IN Sq.m.: 39846392 | WT/ASSY IN Kgs:

CORRUGATED FLOOR ASSEMBLY

SCALE 1:30	SSE/D	
	CHD	A SURESH
ALT. a	ALTD	D Nagarajan
	DRN	D Nagarajan

VBS/DTC/CN

INDIAN RAILWAY STANDARDS
INTEGRAL COACH FACTORY, CHENNAI - 600038

SHEET 1 OF 3

A0113001 | A1

17-08-2026	-07-2026	
DATE OF LATEST ALT.	DATE OF FIRST ISSUE	AME/SME

A0113001

▽ ROUGH MACHINED	(01) ROUGH CLEANED
▽▽ FINISH MACHINED	(01b) BURRS REMOVED
▽▽▽ FINE FINISH MACHINED	(18) CHAMFERED

REVISIONS			
ALT.	ZONE	DESCRIPTION	APPROVED & DATE
-	-	See Sheet1	

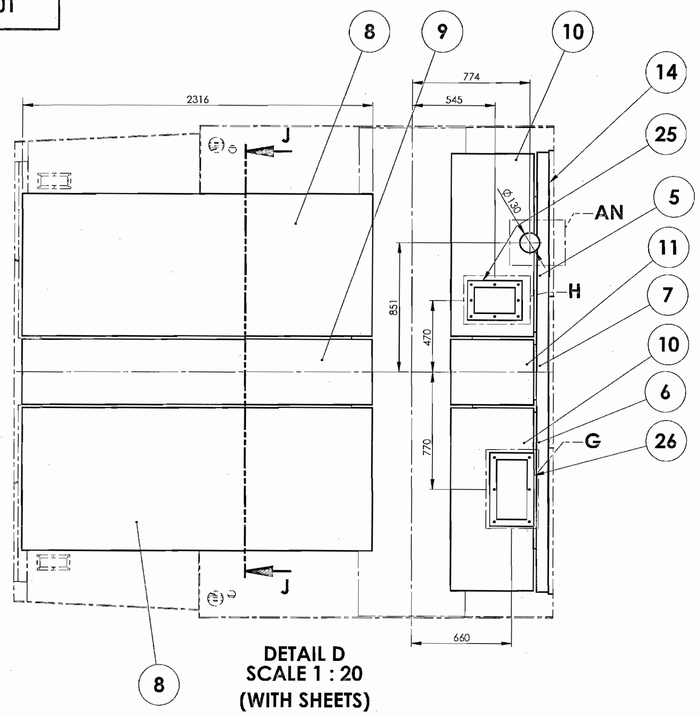

DETAIL D
SCALE 1 : 20
(WITH SHEETS)

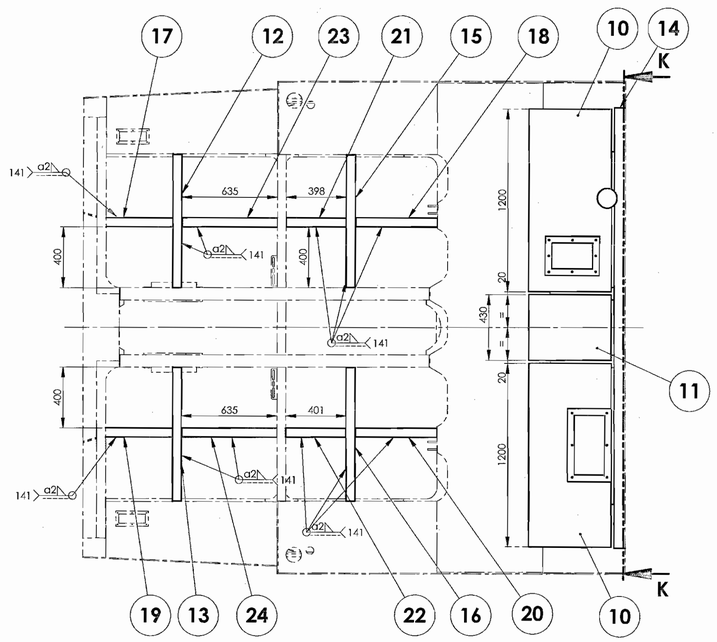

DETAIL D
SCALE 1 : 20
(SHEETS REMOVED)

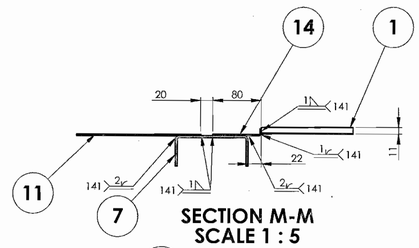

SECTION M-M
SCALE 1 : 5

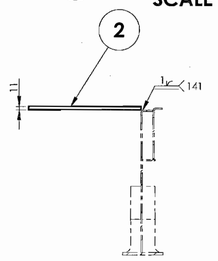

SECTION N-N
SCALE 1 : 10

DETAIL G
SCALE 1 : 5

SECTION K-K
SCALE 1 : 10

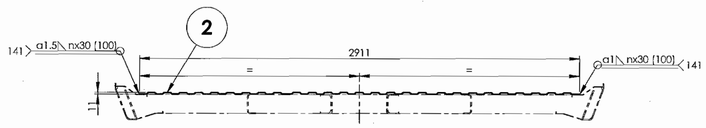

SECTION L-L
SCALE 1 : 20

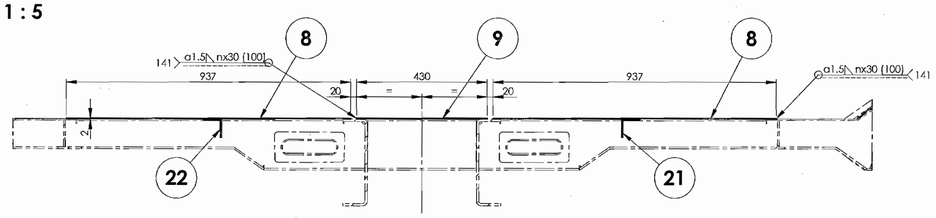

SECTION J-J
SCALE 1 : 10

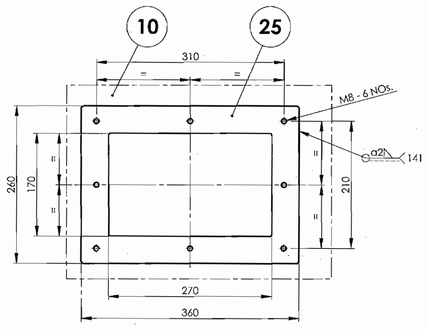

DETAIL H
SCALE 1 : 5

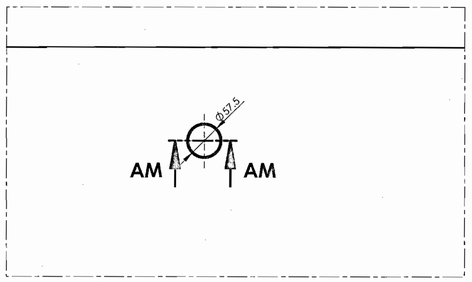

DETAIL AL
SCALE 1 : 5

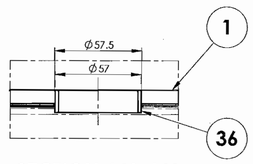

SECTION AM-AM
SCALE 1 : 2

ALL DIMENSIONS ARE IN mm UNLESS OTHERWISE SPECIFIED. FOR UNTOLERANCED DIMENSIONS AND ROUGHNESS VALUES, REFER DRAWING NO.ICF/STD-9-0-001.
ANY MANUAL ALTERATION SHALL AUTOMATICALLY RENDER THIS DRAWING INVALID. WELDING SYMBOLS ARE AS PER EN ISO 2553. WEIGHT GIVEN IN DRAWING IS FOR INDICATIVE PURPOSE ONLY.

REF.DRG.NO.-

DATE OF LATEST ALT.	DATE OF FIRST ISSUE	
17-08-2026	-07-2026	AME/SME

GROUP: 1-3 Trough Floor | SURFACE AREA IN Sq.m.: 3984639 | WT/ASSY IN Kgs:

CORRUGATED FLOOR ASSEMBLY

SCALE 1:30	SSE/D	
	CHD	A SURESH
ALT. a	ALTD	D Nagarajan
	DRN	D Nagarajan

INDIAN RAILWAY STANDARDS
INTEGRAL COACH FACTORY, CHENNAI - 600038

SHEET 2 OF 3

VBS/DTC/CN

A0113001 | A1

A0113001

ROUGH MACHINED	(01) ROUGH CLEANED
FINISH MACHINED	(11b) BURRS REMOVED
FINE FINISH MACHINED	(18) CHAMFERED

REVISIONS			
ALT.	ZONE	DESCRIPTION	APPROVED & DATE
a		ITEM-5 QTY. ALTD. FROM 2 TO 1 AND ITEMS 35 TO 38 ADDED.	

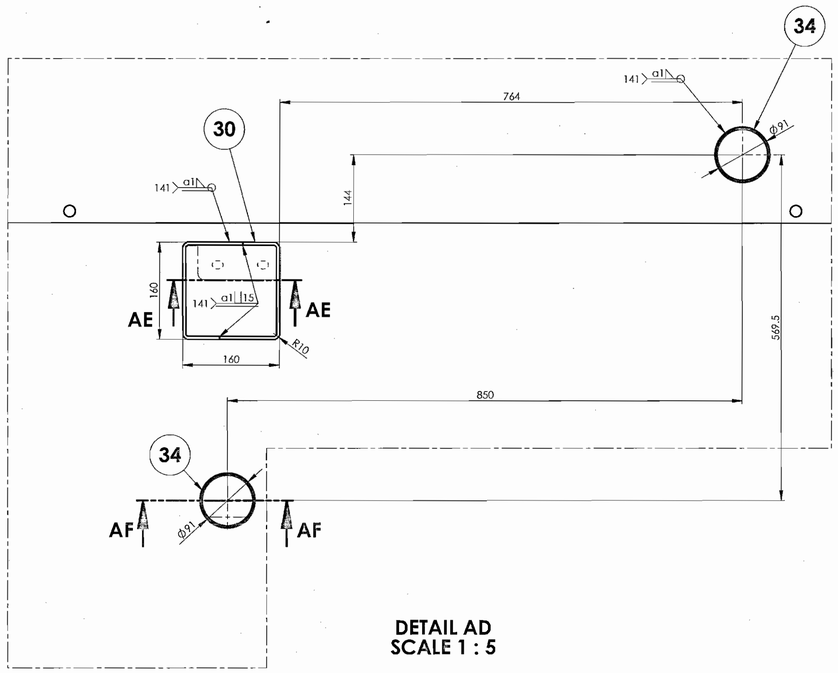

DETAIL AD
SCALE 1 : 5

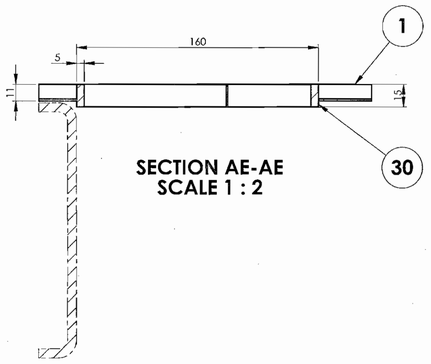

SECTION AE-AE
SCALE 1 : 2

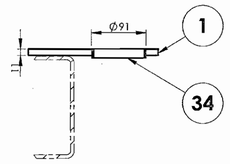

SECTION AF-AF
SCALE 1 : 5

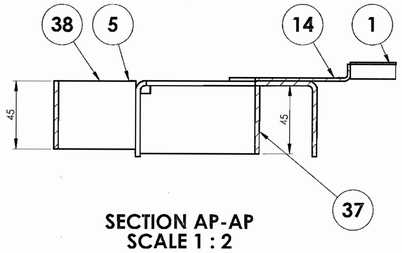

SECTION AP-AP
SCALE 1 : 2

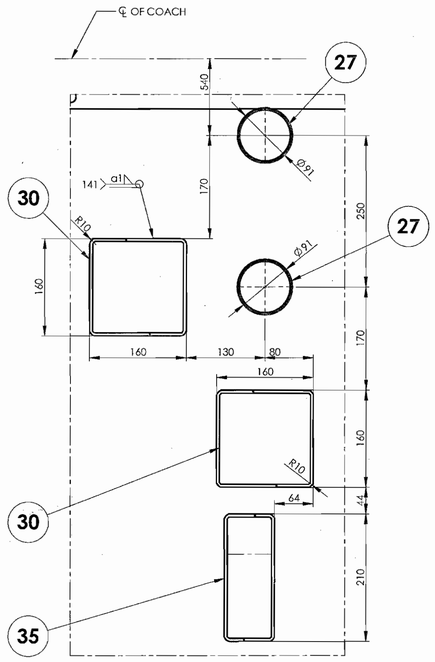

DETAIL AG
SCALE 1 : 5

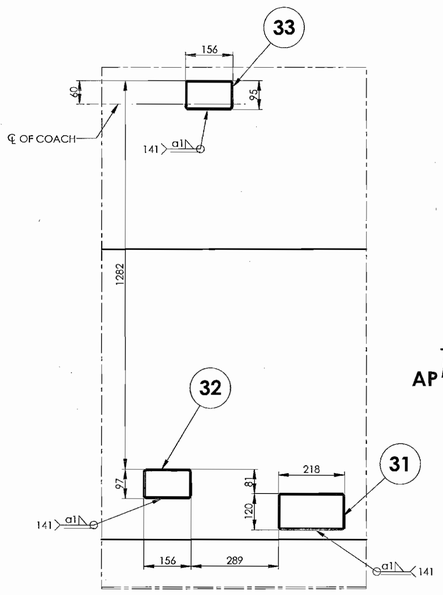

DETAIL AK
SCALE 1 : 10

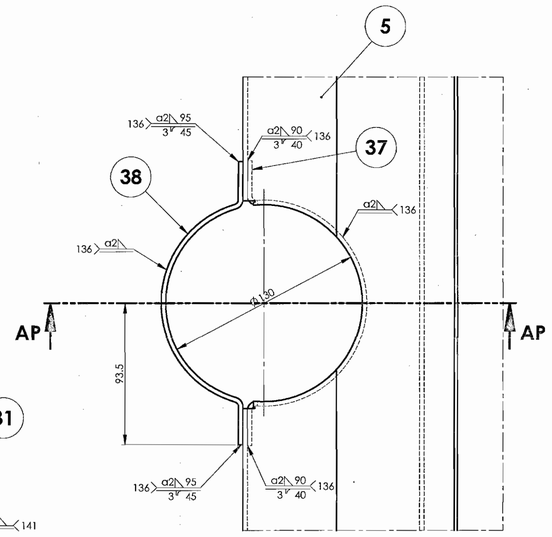

DETAIL AN
SCALE 1 : 2

QTY.	DESCRIPTION	DIMENSIONS	ITEM NO.	REF.DRGS.	MATL	WT/UNIT IN KGS	REMARKS
1	ARC STIFFENER		38	AAA13545		0.25	
1	ARC STIFFENER		37	AAA13544		0.29	
1	STIFFENER		36	AAA13543		0.05	
2	STIFFENER		35	AAA13534		0.16	
2	STIFFENER		34	AAA13526		0.08	
2	STIFFENER		33	AAA13525		0.14	
2	STIFFENER		32	AAA13524		0.24	
2	STIFFENER		31	AAA13523		0.32	
6	STIFFENER		30	AAA13520		0.18	
1	STIFFENER		29	AAA13518		0.22	
1	STIFFENER		28	AAA13506		0.47	
4	STIFFENER		27	AAA13451		0.07	
1	BACK PIECE		26	AAA13501		3.92	
1	BACK PIECE		25	AAA13500		3.05	
1	ANGLE		24	AAE11973		1.82	
1	ANGLE		23	AAE11972		1.82	
1	ANGLE		22	AAE11971		1.16	
1	ANGLE		21	AAE11970		1.16	
1	ANGLE		20	AAE11344		1.68	
1	ANGLE		19	AAE11341		1.29	
1	ANGLE		18	AAE11340		1.68	
1	ANGLE		17	AAE11337		1.29	
1	ANGLE		16	AAE11336		2.55	
1	ANGLE		15	AAE11335		2.55	
1	ANGLE		14	AAA13517		4.05	
1	ANGLE		13	AAA13516		2.45	
1	ANGLE		12	AAA13515		2.45	
1	CLOSING SHEET		11	AAA13514		3.75	
2	CLOSING SHEET		10	AAA13513		10.46	
1	CLOSING SHEET		9	AAE11330		15.93	
2	CLOSING SHEET		8	AAE11329		34.72	
1	CHANNEL		7	AAK11646		1.87	
1	CHANNEL		6	AAK11645		4.14	
1	CHANNEL		5	AAK11800		4.66	
2	BRACKET		4	AAI11588		0.560	
4	FLAT		3	AAE11802		0.170	
1	TROUGH FLOOR SHEET ASSY.		2	A0213002		320.01	
1	TROUGH FLOOR SHEET ASSY.		1	A0113002		206.59	

GROUP: 1-3 Trough Floor | SURFACE AREA IN Sq.m.: 39846392 | WT/ASSY IN Kgs:

CORRUGATED FLOOR ASSEMBLY

SCALE 1:30	SSE/D	
	CHD	A.SURESH
ALT. a	ALTD	D.Nagarajan
	DRN	D.Nagarajan

INDIAN RAILWAY STANDARDS
INTEGRAL COACH FACTORY, CHENNAI - 600038

SHEET 3 OF 3

VBS/DTC/CN

A0113001 A1

17-08-2026	-07-2026	
DATE OF LATEST ALT.	DATE OF FIRST ISSUE	AME/SME

REF.DRG.NO.-

ALL DIMENSIONS ARE IN mm UNLESS OTHERWISE SPECIFIED. FOR UNTOLERANCED DIMENSIONS AND ROUGHNESS VALUES, REFER DRAWING NO ICF/STD-9-0-001.
ANY MANUAL ALTERATION SHALL AUTOMATICALLY RENDER THIS DRAWING INVALID. WELDING SYMBOLS ARE AS PER EN ISO 2553. WEIGHT GIVEN IN DRAWING IS FOR INDICATIVE PURPOSE ONLY.

A0113002

▽ ROUGH MACHINED	(01) ROUGH CLEANED
▽▽ FINISH MACHINED	(11b) BURRS REMOVED
▽▽▽ FINE FINISH MACHINED	(15) CHAMFERED

REVISIONS			
ALT.	ZONE	DESCRIPTION	APPROVED & DATE

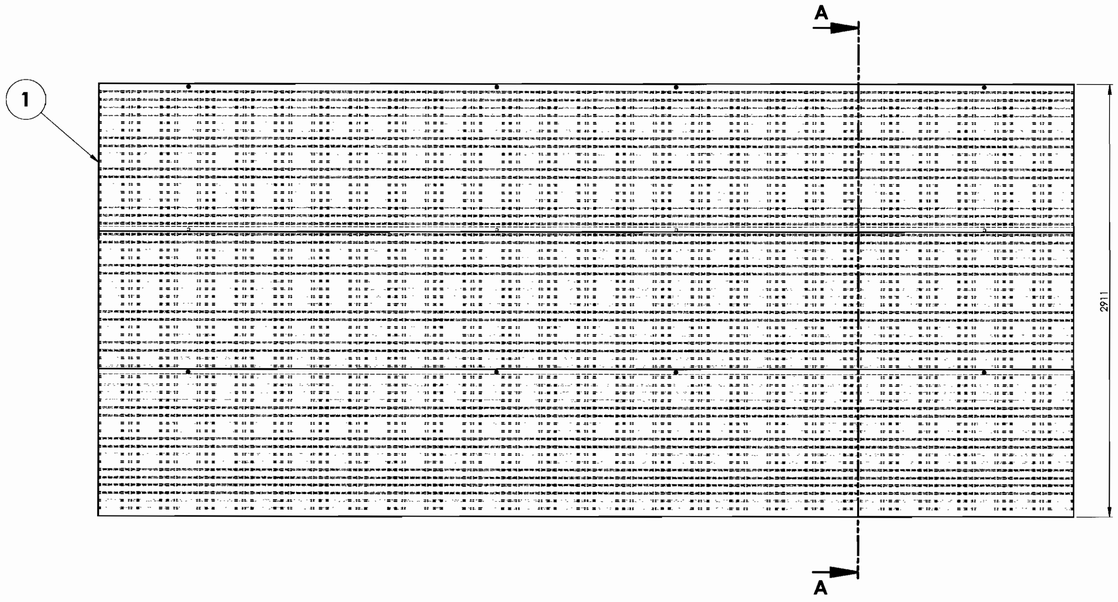

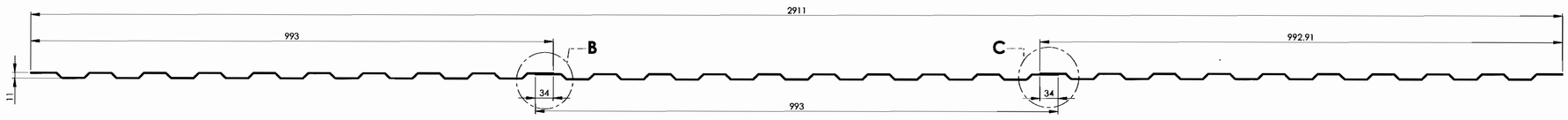

SECTION A-A
SCALE 1 : 5

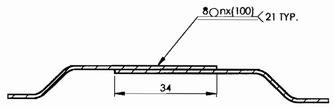

DETAIL B
SCALE 1 : 1

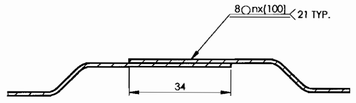

DETAIL C
SCALE 1 : 1

NOTE:

1) FOR WELDING PROCEDURE SPECIFICATIONS(WPS) REFER TO DRG.NO: ICF/STD-9-0-999 . FOR WELDING TEST PREFERENCES, REFER TO DRG.NO: ICF/STD-9-0-998.

2) THE TROUGH FLOOR SHALL BE WELDED USING A PROPER FIXTURE / MANIPULATOR.

QTY.	DESCRIPTION	DIMENSIONS	ITEM NO.	REF.DRGS.	MATL	WT/UNIT IN KGS	REMARKS
3	TROUGH FLOOR PART		1	AAA13498		68.86	

GROUP: 1-3 Trough Floor | SURFACE AREA IN Sq.m.: 413/5490.3 | WT/ASSY IN Kgs:

TROUGH FLOOR SHEET ASSY.

SCALE		
1:50	SSE/D	
	CHD	A SURESH
ALT.	ALT.D	-
-	DRN	D Nagarajan

INDIAN RAILWAY STANDARDS
INTEGRAL COACH FACTORY, CHENNAI - 600038

SHEET 1 OF 1

VBS/DTC/CN

A0113002 | A1

-	01-07-2026	
DATE OF LATEST ALT.	DATE OF FIRST ISSUE	AMD'SME

REF.DRG.NO.-

ALL DIMENSIONS ARE IN mm UNLESS OTHERWISE SPECIFIED. FOR UNTOLERANCED DIMENSIONS AND ROUGHNESS VALUES, REFER DRAWING NO ICF/STD-9-0-001.
ANY MANUAL ALTERATION SHALL AUTOMATICALLY RENDER THIS DRAWING INVALID. WELDING SYMBOLS ARE AS PER EN ISO 2553. WEIGHT GIVEN IN DRAWING IS FOR INDICATIVE PURPOSE ONLY.

A0211008

▽ ROUGH MACHINED	(01) ROUGH CLEANED
▽▽ FINISH MACHINED	(01b) BURRS REMOVED
▽▽▽ FINE FINISH MACHINED	(18) CHAMFERED

REVISIONS			
ALT.	ZONE	DESCRIPTION	APPROVED & DATE

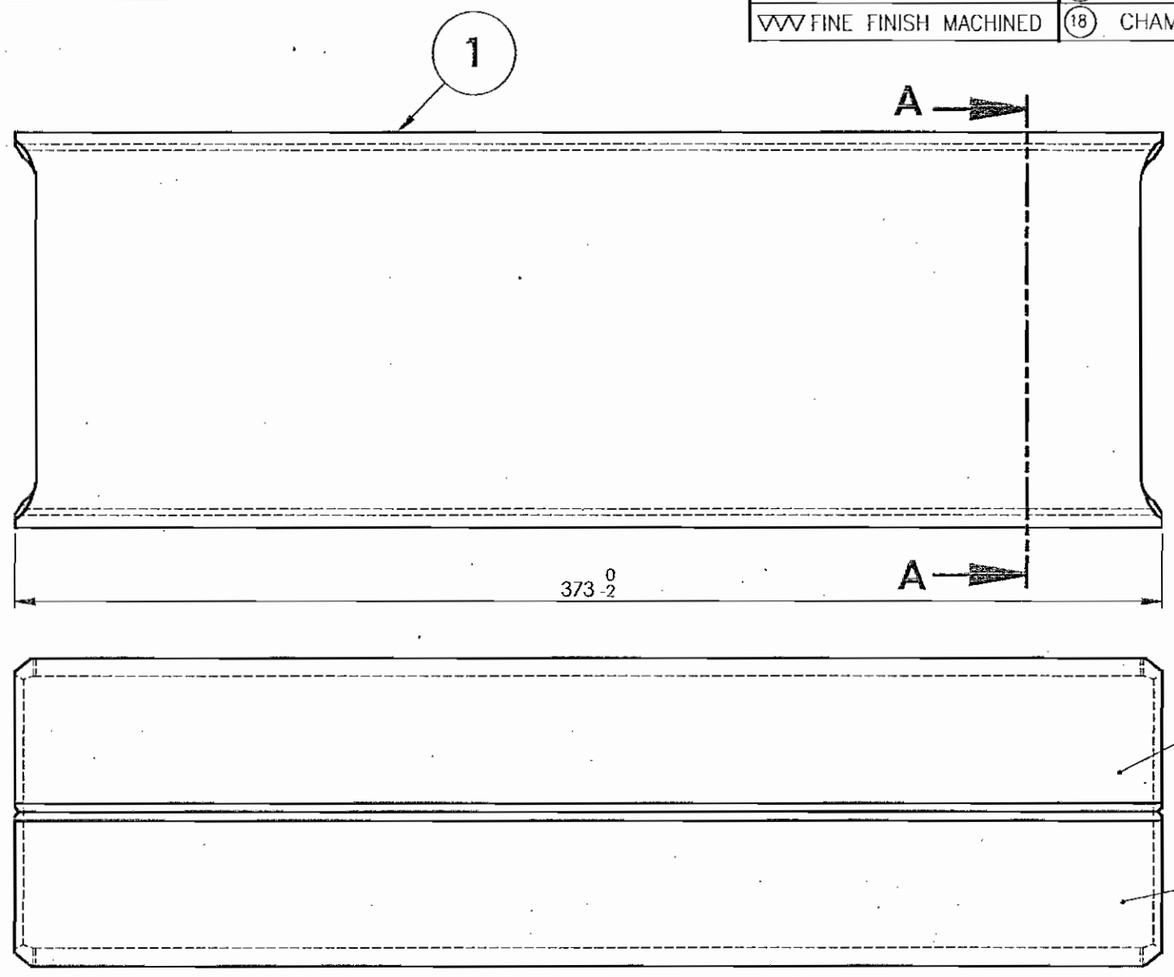

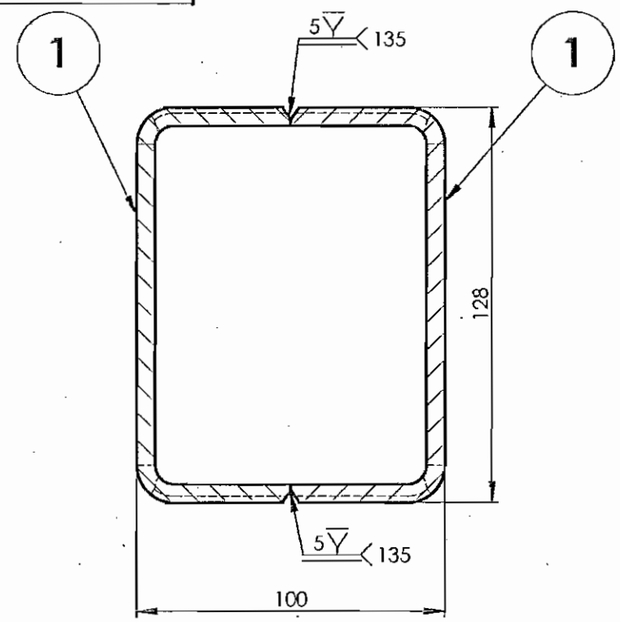

SECTION A-A

NOTE:-

1) FOR WELDING PROCEDURE SPECIFICATIONS(WPS) REF. DRG.NO: ICF/STD-9-0-999 AND FOR WELDING TEST PREFERENCES REFER TO DRG.NO: ICF/STD-9-0-998.

2) ALL WELD SPATTERS SHALL BE GROUND.

QTY.	DESCRIPTION	DIMENSIONS	ITEM NO.	REF.DRGS.	MATL	WT/UNIT IN KGS	REMARKS
2	CHANNEL		1	AAJ11307		3.54	

GROUP: 1-1 Under Frame | SURFACE AREA IN Sq.m.:314905.62 | WT/ASSY IN Kgs:

CHANNEL ASSY.

SCALE	SSE/D	
1:2	CHD	
ALT.	ALTD	
	DRN	G. SURESH BABU/SURESH KUMAR S

INDIAN RAILWAY STANDARDS
INTEGRAL COACH FACTORY, CHENNAI - 600038

SHEET 1 OF 1

VBS/MC/CN

A0211008 A3

DATE OF LATEST ALT.	DATE OF FIRST ISSUE	AME/SME
	18-02-2026	

REF.DRG.NO.-

ALL DIMENSIONS ARE IN mm UNLESS OTHERWISE SPECIFIED. FOR UNTOLERANCED DIMENSIONS AND ROUGHNESS VALUES, REFER DRAWING NO ICF/STD-9-0-001.
ANY MANUAL ALTERATION SHALL AUTOMATICALLY RENDER THIS DRAWING INVALID. WELDING SYMBOLS ARE AS PER EN ISO 2553.
WEIGHT GIVEN IN DRAWING IS FOR INDICATIVE PURPOSE ONLY

A0211015

ROUGH MACHINED	(01) ROUGH CLEANED
FINISH MACHINED	(01b) BURRS REMOVED
FINE FINISH MACHINED	(18) CHAMFERED

REVISIONS			
ALT.	ZONE	DESCRIPTION	APPROVED & DATE
a		ITEMS-1&3 UPDATED AS PER DETAIL SECTION C-C REVISED. ITEM-4 ADDED.	

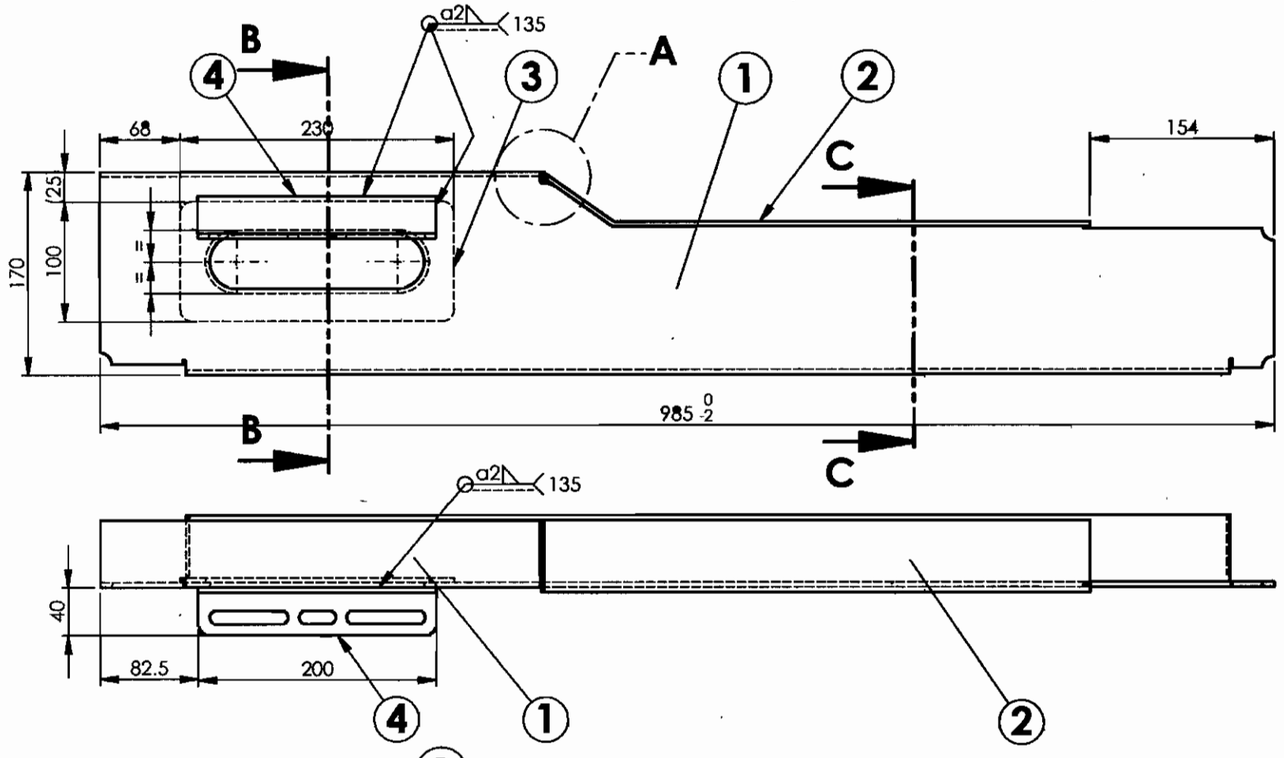

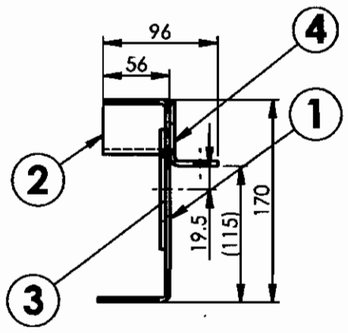

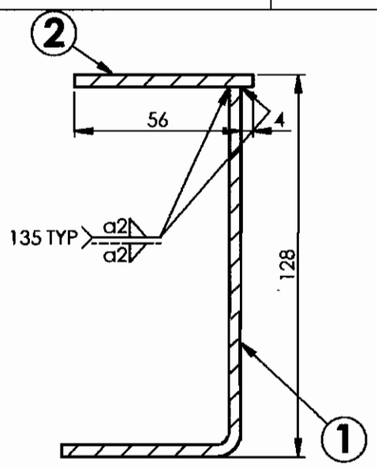

SECTION C-C
SCALE 1 : 2

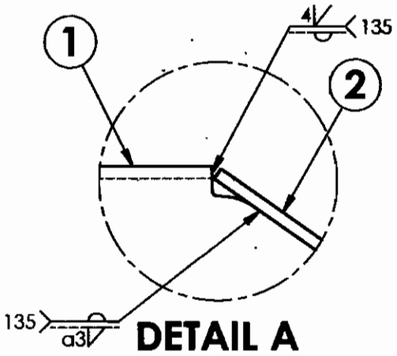

DETAIL A
SCALE 1 : 2

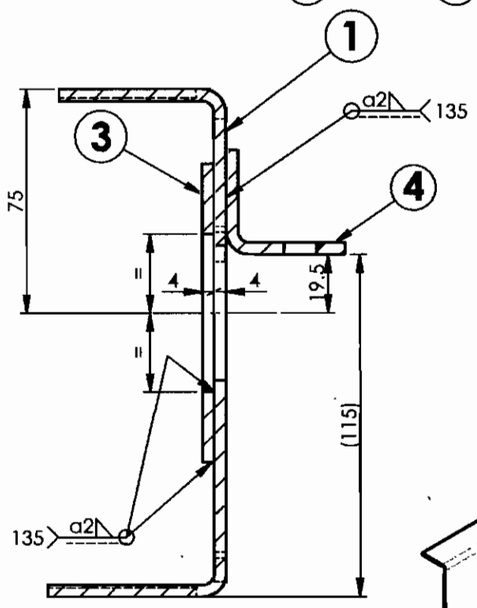

SECTION B-B
SCALE 1 : 2

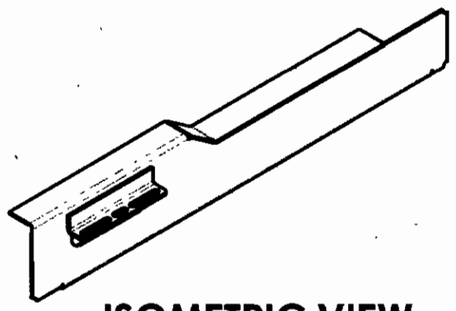

ISOMETRIC VIEW

NOTE:-

1) FOR WELDING PROCEDURE SPECIFICATIONS(WPS) REF. DRG.NO: ICF/STD-9-0-999 AND FOR WELDING TEST PREFERENCES REFER TO DRG.NO: ICF/STD-9-0-998.

2) ALL WELD SPATTERS SHALL BE GROUND.

QTY.	DESCRIPTION	DIMENSIONS	ITEM NO.	REF.DRGS.	MATL	WT/UNIT IN KGS	REMARKS
1	SUPPORT ANGLE		4	AAK11411		0.38	
1	STIFFENER		3	AAK11137		0.43	
1	ANGLE		2	AAD11697		0.89	
1	CHANNEL L.H		1	AAK11136		6.16	

GROUP: 1-1 | SURFACE AREA IN Sq.m.:0.524 | WT/ASSY IN Kgs:

CROSS MEMBER COMPLETE L.H

SCALE 1:5	SSE/D	
	CHD	
ALT. a	ALTD	VISHNU PRASAD.T
	DRN	G.SURESH BABU/S.SURESH KUMAR

INDIAN RAILWAY STANDARDS
INTEGRAL COACH FACTORY, CHENNAI - 600038

SHEET 1 OF 1

VBS/MC/CN

A0211015 A3

27-04-2026	18-02-2026	
DATE OF LATEST ALT.	DATE OF FIRST ISSUE	AME/SME

REF.DRG.NO.

ALL DIMENSIONS ARE IN mm UNLESS OTHERWISE SPECIFIED. FOR UNTOLERANCED DIMENSIONS AND ROUGHNESS VALUES, REFER DRAWING NO ICF/STD-9-0-001.
ANY MANUAL ALTERATION SHALL AUTOMATICALLY RENDER THIS DRAWING INVALID. WELDING SYMBOLS ARE AS PER EN ISO 2553.
WEIGHT GIVEN IN DRAWING IS FOR INDICATIVE PURPOSE ONLY

A0211016

ROUGH MACHINED	(01) ROUGH CLEANED
FINISH MACHINED	(01b) BURRS REMOVED
FINE FINISH MACHINED	(18) CHAMFERED

REVISIONS			
ALT.	ZONE	DESCRIPTION	APPROVED & DATE
a		ITEMS-1&3 UPDATED AS PER DETAIL. SECTION D-D REVISED. ITEM-4 ADDED.	

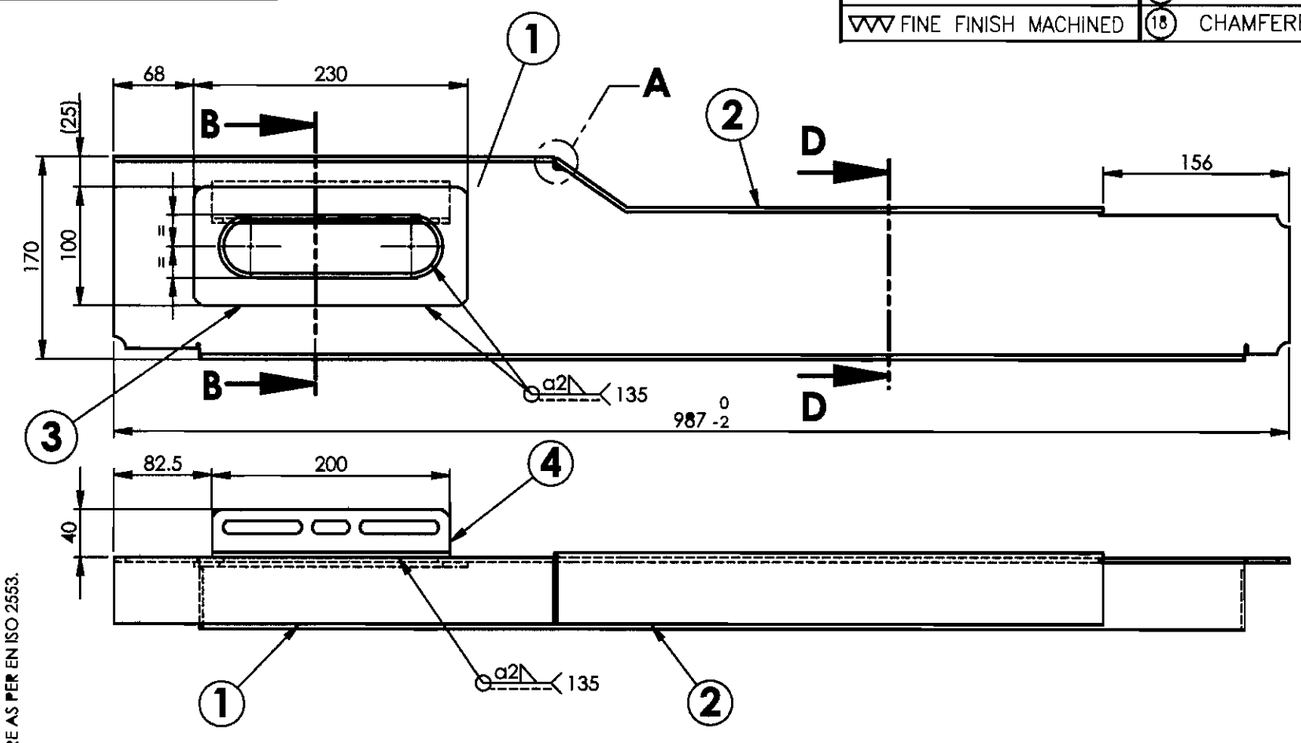

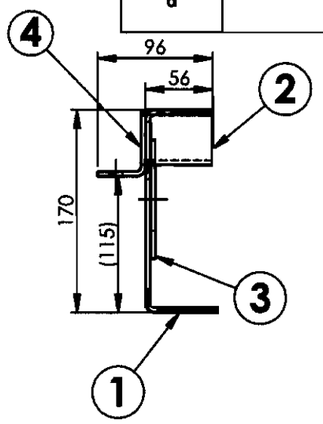

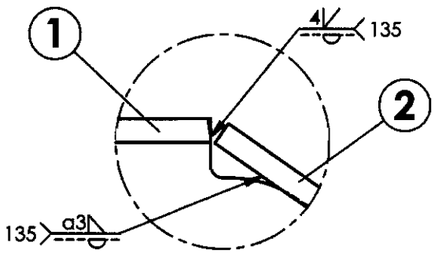

DETAIL A
SCALE 1 : 1

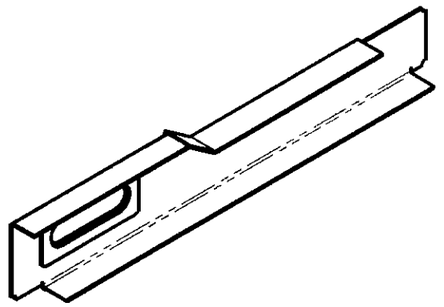

ISOMETRIC VIEW

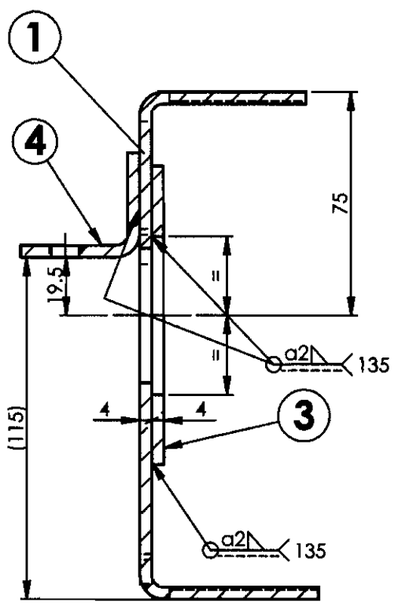

SECTION B-B
SCALE 1 : 2

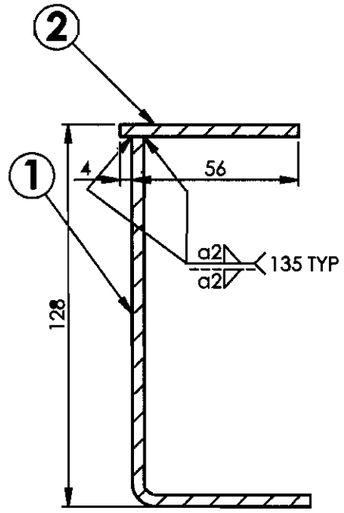

SECTION D-D
SCALE 1 : 2

NOTE:-

1) FOR WELDING PROCEDURE SPECIFICATIONS(WPS) REF. DRG.NO: ICF/STD-9-0-999 AND FOR WELDING TEST PREFERENCES REFER TO DRG.NO: ICF/STD-9-0-998.

2) ALL WELD SPATTERS SHALL BE GROUND.

QTY.	DESCRIPTION	DIMENSIONS	ITEM NO.	REF.DRGS.	MATL	WT/UNIT IN KGS	REMARKS
1	SUPPORT ANGLE		4	AAK11411		0.38	
1	STIFFENER		3	AAK11137		0.43	
1	ANGLE		2	AAD11697		0.89	
1	CHANNEL R.H		1	AAK11138		6.18	

GROUP: 1-1 Under Frame | SURFACE AREA IN Sq.m.:0.525 | WT/ASSY IN Kgs:

CROSS MEMBER COMPLETE R.H

SCALE 1:5	SSE/D	
	CHD	
ALT. a	ALTD	VISHNU PRASAD.T
	DRN	G.SURESH BABU/SURESH KUMAR S

VBS/MC/CN

INDIAN RAILWAY STANDARDS
INTEGRAL COACH FACTORY, CHENNAI - 600038

SHEET 1 OF 1

A0211016 A3

DATE OF LATEST ALT.	DATE OF FIRST ISSUE	AME/SME
27-04-2026	18-02-2026	

REF.DRG.NO.-

ALL DIMENSIONS ARE IN mm UNLESS OTHERWISE SPECIFIED. FOR UNTOLERANCED DIMENSIONS AND ROUGHNESS VALUES, REFER DRAWING NO ICF/STD-9-0-001.
ANY MANUAL ALTERATION SHALL AUTOMATICALLY RENDER THIS DRAWING INVALID. WELDING SYMBOLS ARE AS PER EN ISO 2553.
WEIGHT GIVEN IN DRAWING IS FOR INDICATIVE PURPOSE ONLY

A0211021

ROUGH MACHINED	(01) ROUGH CLEANED
FINISH MACHINED	(01b) BURRS REMOVED
FINE FINISH MACHINED	(18) CHAMFERED

REVISIONS			
ALT.	ZONE	DESCRIPTION	APPROVED & DATE

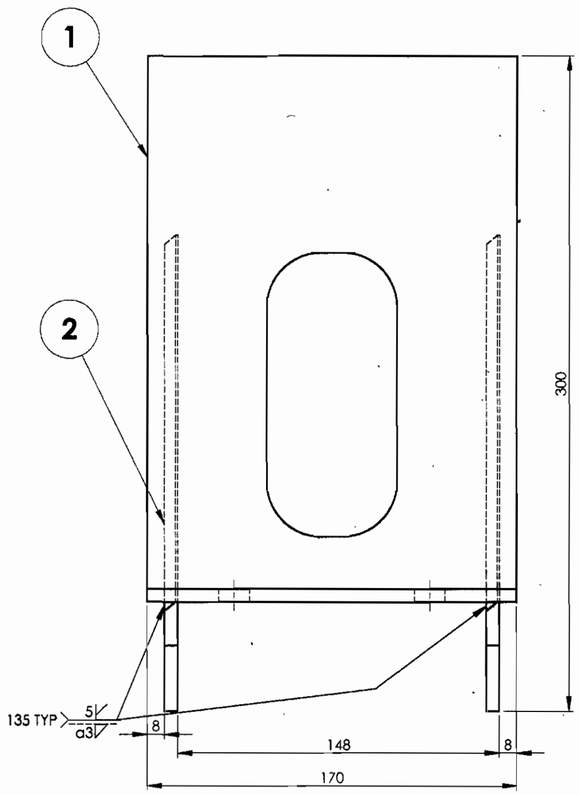

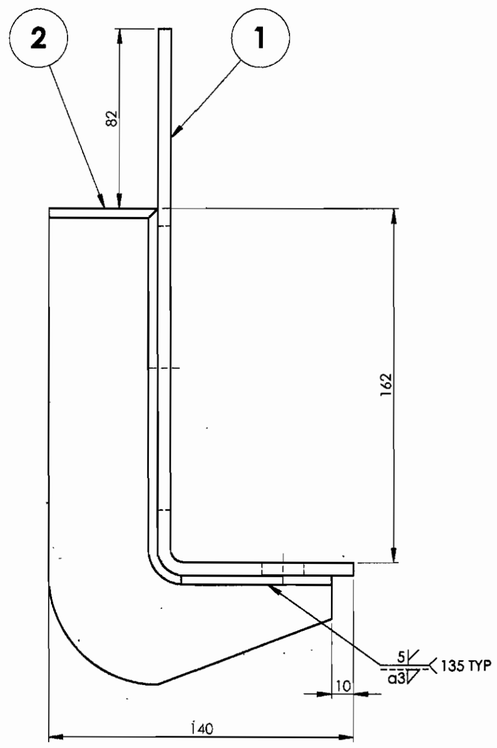

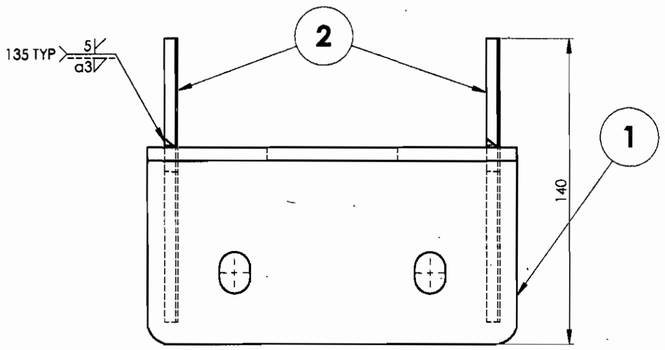

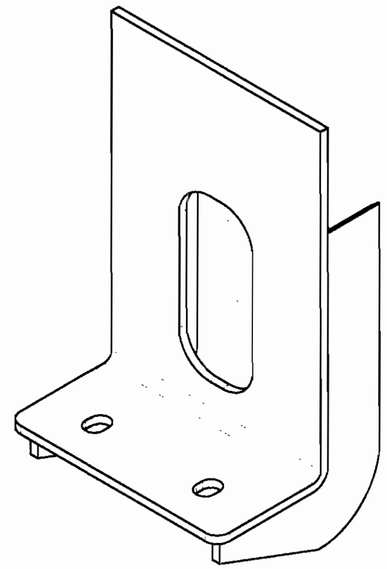

ISOMETRIC VIEW

NOTE:-

1) FOR WELDING PROCEDURE SPECIFICATIONS(WPS) REF. DRG.NO: ICF/STD-9-0-999 AND FOR WELDING TEST PREFERENCES REFER TO DRG.NO: ICF/STD-9-0-998.

2) ALL WELD SPATTERS SHALL BE GROUND.

QTY.	DESCRIPTION	DIMENSIONS	ITEM NO.	REF.DRGS.	MATL	WT/UNIT IN KGS	REMARKS
2	RIB		2	AAK11071		0.60	
1	ANGLE FOR WRA		1	AAK11239		2.28	

GROUP: 1-1 Under Frame | SURFACE AREA IN Sq.m.: 164265.4 | WT/ASSY IN Kgs:

MOUNTING BRACKET ASSY FOR WRA

SCALE 1:2 | SSE/D | CHD | ALT | ALTD | DRN | G. SURESH BABU/VISHNU

INDIAN RAILWAY STANDARDS
INTEGRAL COACH FACTORY, CHENNAI - 600038

SHEET 1 OF 1

VBS/MC/CN

A0211021 A2

DATE OF LATEST ALT	DATE OF FIRST ISSUE	AME/SME
	9.-03-2026	

REF.DRG.NO.-

ALL DIMENSIONS ARE IN mm UNLESS OTHERWISE SPECIFIED. FOR UNTOLERANCED DIMENSIONS AND ROUGHNESS VALUES, REFER DRAWING NO ICF/STD-9-0-001.
ANY MANUAL ALTERATION SHALL AUTOMATICALLY RENDER THIS DRAWING INVALID. WELDING SYMBOLS ARE AS PER IS:813-1986. WEIGHT GIVEN IN DRAWING IS FOR INDICATIVE PURPOSE ONLY

A0211033

▽ ROUGH MACHINED	(01) ROUGH CLEANED
▽▽ FINISH MACHINED	(01b) BURRS REMOVED
▽▽▽ FINE FINISH MACHINED	(18) CHAMFERED

REVISIONS			
ALT.	ZONE	DESCRIPTION	APPROVED & DATE

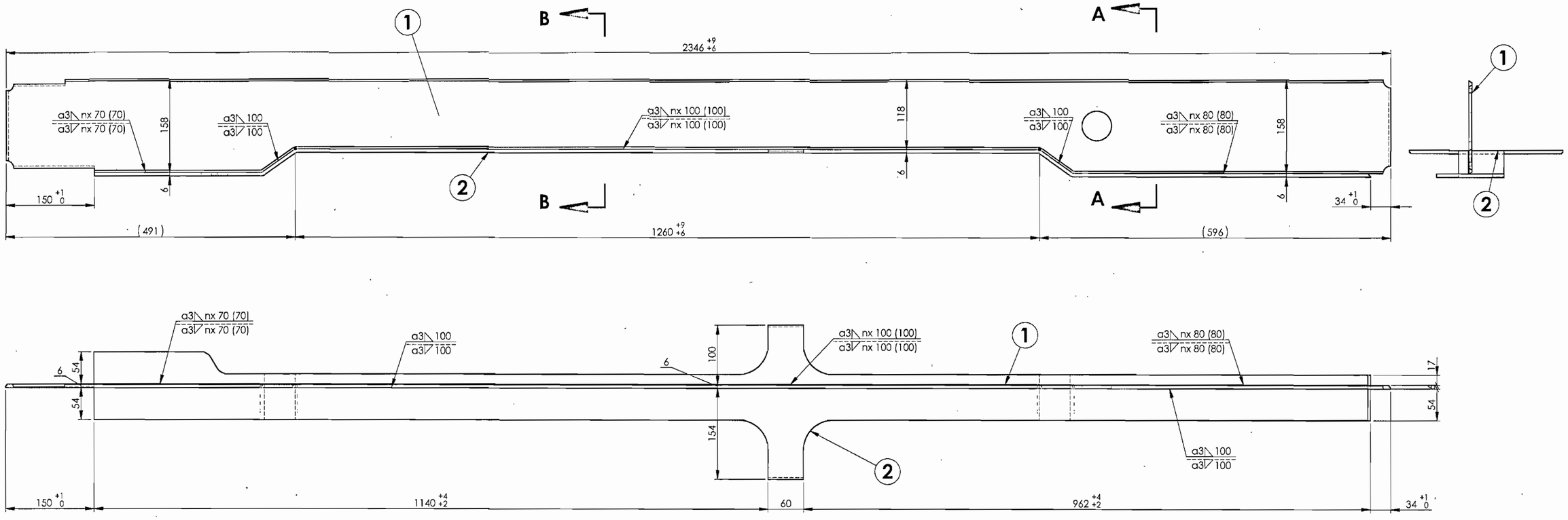

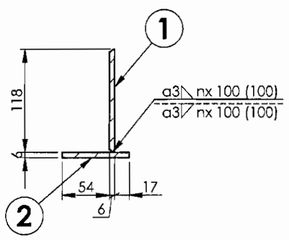

SECTION B-B
SCALE 1 : 5

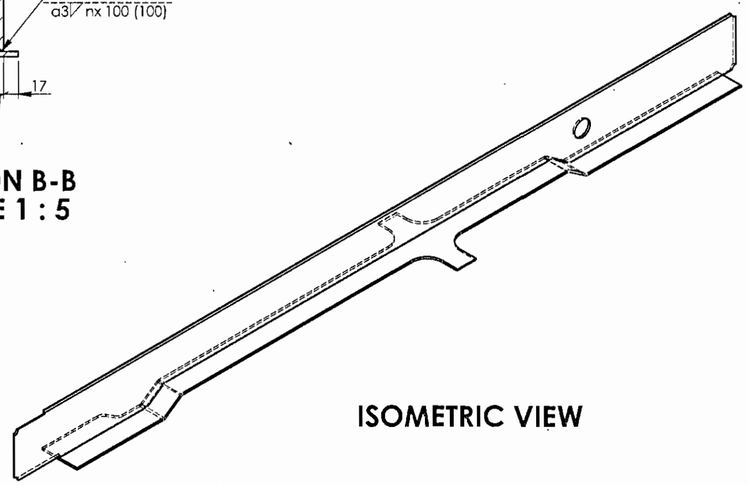

ISOMETRIC VIEW

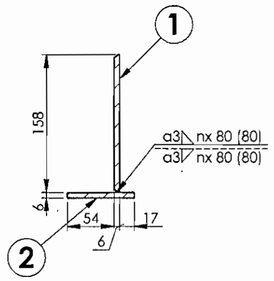

SECTION A-A
SCALE 1 : 5

QTY.	DESCRIPTION	DIMENSIONS	ITEM NO.	REF.DRGS.	MATL	WT/UNIT IN KGS	REMARKS
1	TOP PLATE		2	AAD11693		8.89	
1	WEB		1	AAD11689		14.44	

GROUP: 1-1 Under Frame | SURFACE AREA IN Sq.m.: 1.053 | WT/ASSY IN Kgs:

CONNECTING MEMBER ASSEMBLY L.H

SCALE 1:10	SSE/D	
	CHD	
ALT -	ALTD	
	DRN	SURESH KUMAR S

VBS/MC/CN

INDIAN RAILWAY STANDARDS
INTEGRAL COACH FACTORY, CHENNAI - 600038

SHEET 1 OF 1

A0211033 A2

DATE OF LATEST ALT.	DATE OF FIRST ISSUE	AME/SME
	22.06.2026	

REF.DRG.NO.-

ALL DIMENSIONS ARE IN mm UNLESS OTHERWISE SPECIFIED. FOR UNTOLERANCED DIMENSIONS AND ROUGHNESS VALUES, REFER DRAWING NO ICF/STD-9-0-001.
ANY MANUAL ALTERATION SHALL AUTOMATICALLY RENDER THIS DRAWING INVALID. WELDING SYMBOLS ARE AS PER EN ISO 2553. WEIGHT GIVEN IN DRAWING IS FOR INDICATIVE PURPOSE ONLY

A0213002

ALT.	ZONE	REVISIONS DESCRIPTION	APPROVED & DATE
a		ITEM -1 DELETED. QTY FOR ITEM-2 REVISED. VIEWS AND SECTIONS REVISED ACCORDLY.NOTE-3 REVISED.	Sd/-
b		NOTE-3 DELETED. OVERALL TROUGH FLOOR LENGTH ADDED.	

▽ ROUGH MACHINED	(01) ROUGH CLEANED
▽▽ FINISH MACHINED	(11b) BURRS REMOVED
▽▽▽ FINE FINISH MACHINED	(18) CHAMFERED

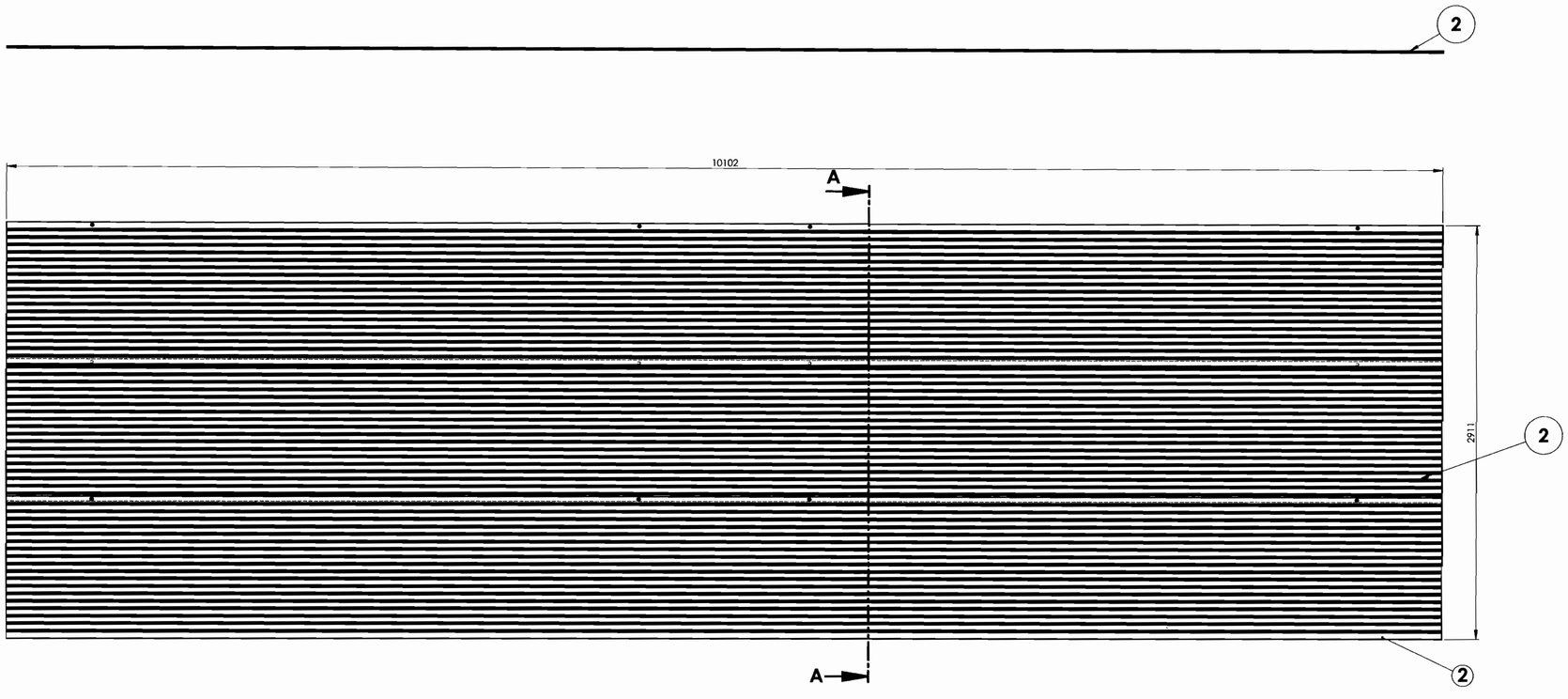

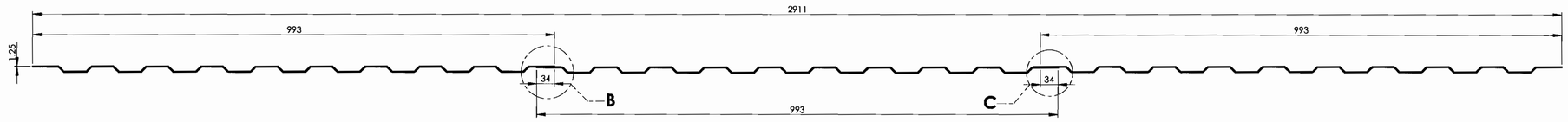

SECTION A-A
SCALE 1 : 5

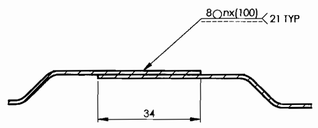

DETAIL B
SCALE 1 : 1

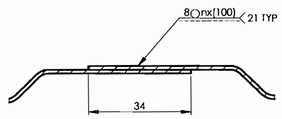

DETAIL C
SCALE 1 : 1

NOTE:

1) FOR WELDING PROCEDURE SPECIFICATIONS(WPS) REFER TO DRG.NO: ICF/STD-9-0-999 . FOR WELDING TEST PREFERENCES, REFER TO DRG.NO: ICF/STD-9-0-998.

2) THE TROUGH FLOOR SHALL BE WELDED USING A PROPER FIXTURE / MANIPULATOR.

QTY.	DESCRIPTION	DIMENSIONS	ITEM NO.	REF.DRGS.	MATL	WT/UNIT IN KGS	REMARKS
3	TROUGH FLOOR PART		2	AAA13472		106.67	
2	~~TROUGH FLOOR END PART~~		~~1~~	~~AAA13473~~		~~54.92~~	

GROUP: 1-3 Trough Floor | SURFACE AREA IN Sq.m.: 64085863.99 | WT/ASSY IN Kgs:

TROUGH FLOOR SHEET ASSY.

SCALE 1:50	SSE/D	
	CHD	
ALT. b	ALTD	VISHNU PRASAD.T
	DRN	SURESH KUMAR S

INDIAN RAILWAY STANDARDS
INTEGRAL COACH FACTORY, CHENNAI - 600038

SHEET 1 OF 1

VBS/MC/CN

A0213002 | A1

06-06-2026 DATE OF LATEST ALT. | 25-03-2026 DATE OF FIRST ISSUE | AME/SME

REF.DRG.NO.-

ALL DIMENSIONS ARE IN mm UNLESS OTHERWISE SPECIFIED. FOR UNTOLERANCED DIMENSIONS AND ROUGHNESS VALUES, REFER DRAWING NO ICF/STD-9-0-001.
ANY MANUAL ALTERATION SHALL AUTOMATICALLY RENDER THIS DRAWING INVALID. WELDING SYMBOLS ARE AS PER EN ISO 2553. WEIGHT GIVEN IN DRAWING IS FOR INDICATIVE PURPOSE ONLY.

A0811009

ROUGH MACHINED	(01) ROUGH CLEANED
FINISH MACHINED	(01B) BURRS REMOVED.
FINE FINISH MACHINED	(18) CHAMFERED

REVISIONS			
ALT.	ZONE	DESCRIPTION	APPROVED & DATE
a		ITEM-1 UPDATED AS PER DETAIL	

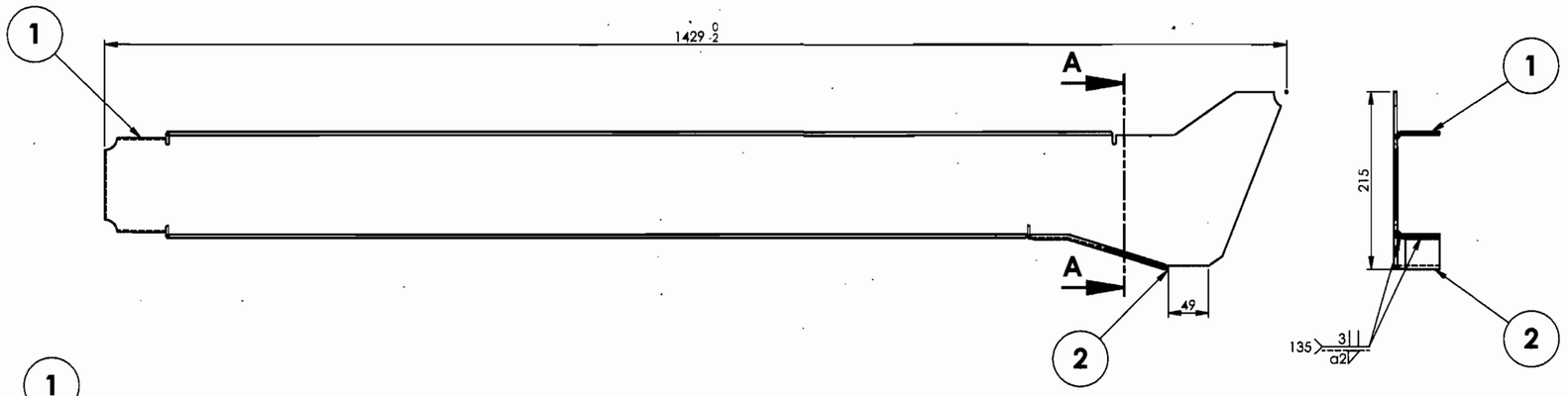

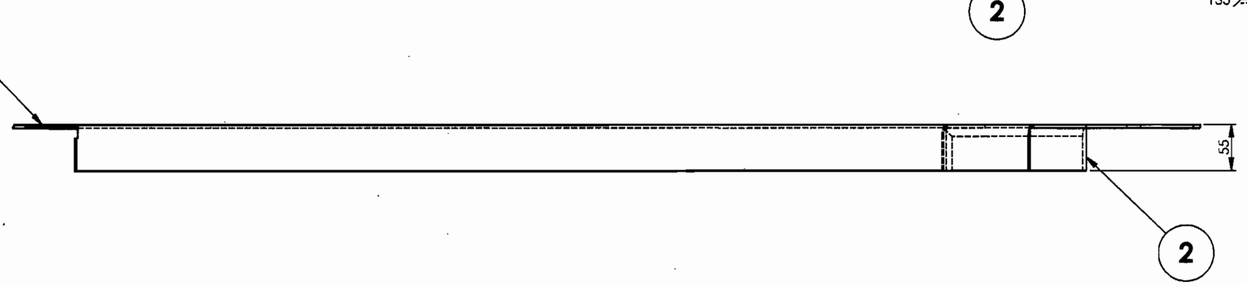

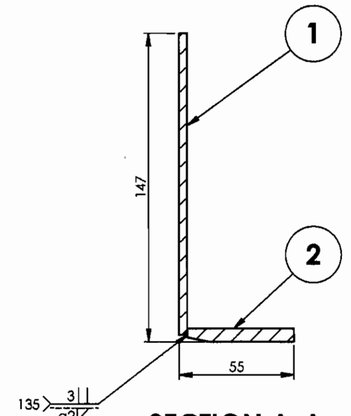

SECTION A-A
SCALE 1 : 2

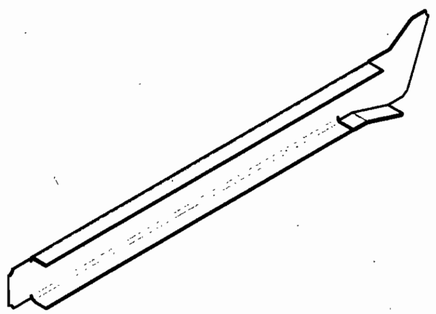

ISOMETRIC VIEW

NOTE:

1. ALL WELD SPATTERS SHALL BE GROUND.
2. FOR WELDING TESTING PREFERENCES REFER DRG.NO.ICF/STD-9-0-998 AND FOR WELDING PROCEDURE SPECIFICATIONS REFER DRG.NO:ICF/STD-9-0-999.

ALL DIMENSIONS ARE IN mm UNLESS OTHERWISE SPECIFIED. FOR UNTOLERANCED DIMENSIONS AND ROUGHNESS VALUES, REFER DRAWING NO. ICF/STD-9-0-001.
ANY MANUAL ALTERATION SHALL AUTOMATICALLY RENDER THIS DRAWING INVALID. WELDING SYMBOLS ARE AS PER IS:813-1986. WEIGHT GIVEN IN DRAWING IS FOR INDICATIVE PURPOSE ONLY

REF.DRG.NO.-

QTY.	DESCRIPTION	DIMENSIONS	ITEM NO.	REF.DRGS.	MATL	WT/UNIT IN KGS	REMARKS
1	BOTTOM PLATE R H		2	AAE11155		0.40	
1	CROSS MEMBER R.H		1	AAK11246		8.96	

GROUP: | SURFACE AREA IN Sq.m.: 0.604 | WT/ASSY IN Kgs:

CROSS MEMBER ASSEMBLY RH

SCALE 1:5	SSE/D	
	CHD	
ALT a	ALTD	VISHNU PRASAD.T
	DRN	G. SURESH BABU/VISHNU

INDIAN RAILWAY STANDARDS
INTEGRAL COACH FACTORY, CHENNAI - 600038

SHEET 1 OF 1

VBS/NDTC/FAC

A0811009 A3

27-04-2026	28-02-2026	
DATE OF LATEST ALT.	DATE OF FIRST ISSUE	AME/SME

A0811010

▽ ROUGH MACHINED	(01) ROUGH CLEANED
▽▽ FINISH MACHINED	(01b) BURRS REMOVED
▽▽▽ FINE FINISH MACHINED	(18) CHAMFERED

REVISIONS			
ALT.	ZONE	DESCRIPTION	APPROVED & DATE
a		ITEM-1 UPDATED AS PER DETAIL	

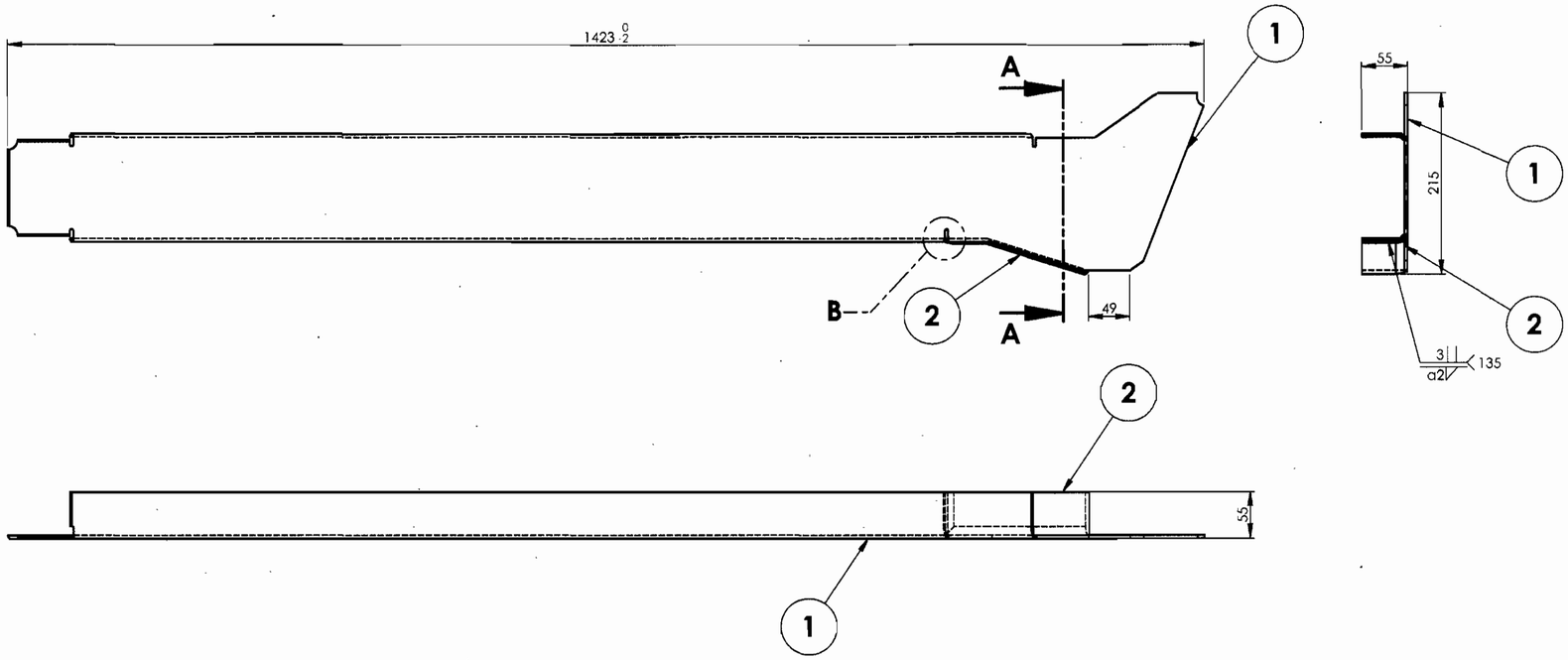

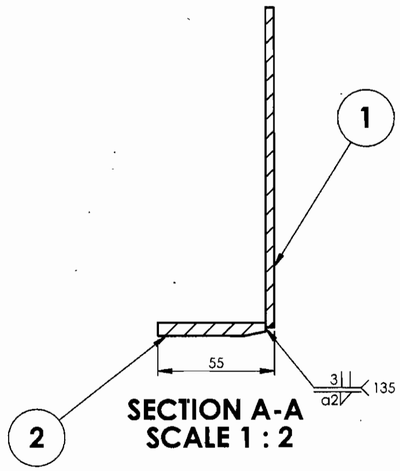

SECTION A-A
SCALE 1 : 2

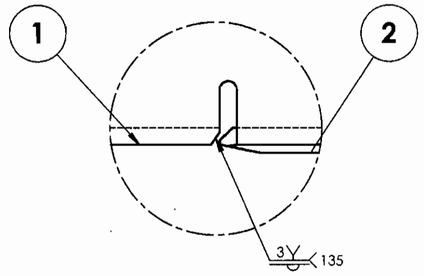

DETAIL B
SCALE 1 : 1

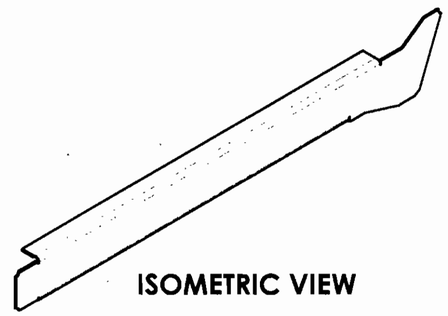

ISOMETRIC VIEW

ALL DIMENSIONS ARE IN mm UNLESS OTHERWISE SPECIFIED. FOR UNTOLERANCED DIMENSIONS AND ROUGHNESS VALUES, REFER DRAWING NO ICF/STD-9-0-001.
ANY MANUAL ALTERATION SHALL AUTOMATICALLY RENDER THIS DRAWING INVALID. WELDING SYMBOLS ARE AS PER EN ISO 2553. WEIGHT GIVEN IN DRAWING IS FOR INDICAITVE PURPOSE ONLY

NOTE:-

1) FOR WELDING PROCEDURE SPECIFICATIONS(WPS) REF. DRG.NO: ICF/STD-9-0-999 AND FOR WELDING TEST PREFERENCES REFER TO DRG.NO: ICF/STD-9-0-998.

2) ALL WELD SPATTERS SHALL BE GROUND.

QTY.	DESCRIPTION	DIMENSIONS	ITEM NO.	REF.DRGS.	MATL	WT/UNIT IN KGS	REMARKS
1	BOTTOM PLATE L H		2	AAE11154		0.40	
1	CROSS MEMBER L.H		1	AAJ11304		8.96	

GROUP: 1-1 Under Frame | SURFACE AREA IN Sq.m.: 0.605 | WT/ASSY IN Kgs:

CROSS MEMBER ASSEMBLY L.H

SCALE 1:5 | SSE/D | CHD

ALT a | ALTD: VISHNU PRASAD.T | DRN: G. SURESH BABU/SURESH KUMAR S

VBS/MC/CN

INDIAN RAILWAY STANDARDS
INTEGRAL COACH FACTORY, CHENNAI - 600038

SHEET 1 OF 1

A0811010 A2

27-04-2026	18-02-2026	
DATE OF LATEST ALT.	DATE OF FIRST ISSUE	AME/SME

REF.DRG.NO.-

A0811018

▽ ROUGH MACHINED	(01) ROUGH CLEANED
▽▽ FINISH MACHINED	(01b) BURRS REMOVED
▽▽▽ FINE FINISH MACHINED	(18) CHAMFERED

REVISIONS			
ALT.	ZONE	DESCRIPTION	APPROVED & DATE

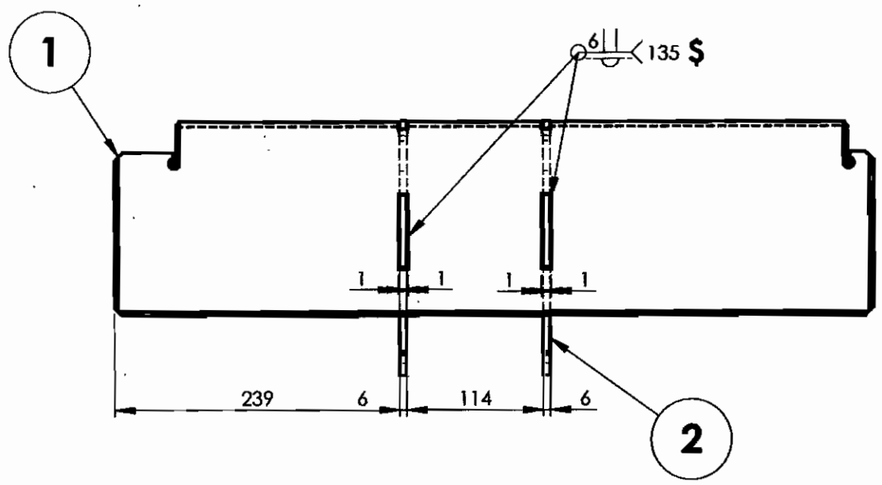

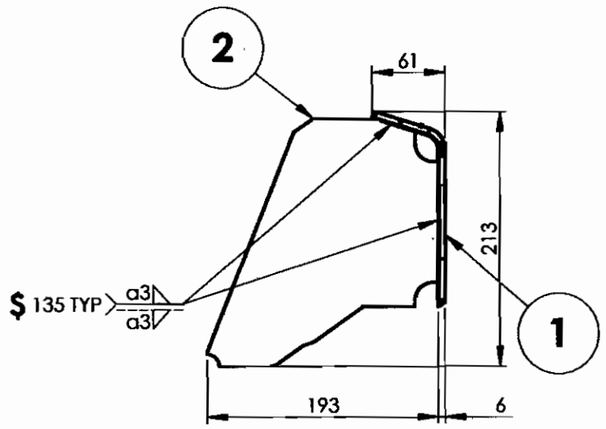

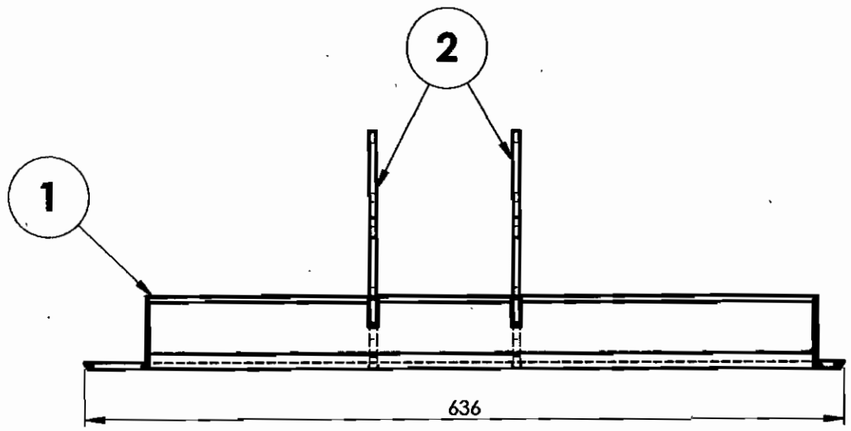

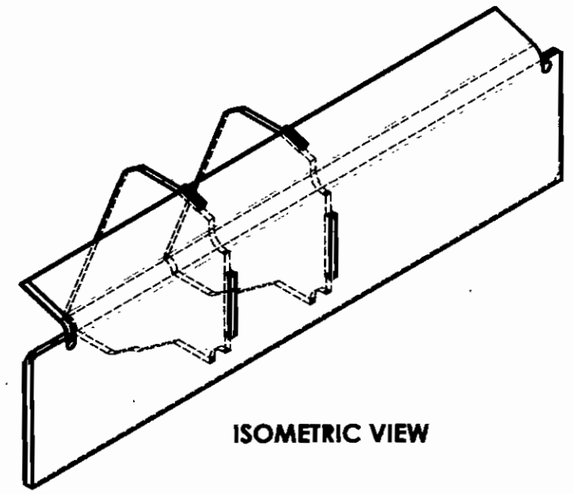

ISOMETRIC VIEW

ALL DIMENSIONS ARE IN mm UNLESS OTHERWISE SPECIFIED. FOR UNTOLERANCED DIMENSIONS AND ROUGHNESS VALUES, REFER DRAWING NO ICF/STD-9-0-001.
ANY MANUAL ALTERATION SHALL AUTOMATICALLY RENDER THIS DRAWING INVALID. WELDING SYMBOLS ARE AS PER EN ISO 2553.
WEIGHT GIVEN IN DRAWING IS FOR INDICATIVE PURPOSE ONLY

NOTE:

1. ALL WELDING PERFORMANCE SHALL BE CP C2 UNLESS OTHERWISE SPECIFIED.
2. FOR WELDING TESTING PREFERENCES REFER DRG.NO.ICF/STD-9-0-998 AND FOR WELDING PROCEDURE SPECIFICATIONS REFER DRG.NO:ICF/STD-9-0-999.

$ 3. ITEMS-1&2 SHALL BE SUPPLIED LOOSE AND ASSEMBLED AT UNDERFRAME ASSEMBLY STAGE.

QTY.	DESCRIPTION	DIMENSIONS	ITEM NO.	REF.DRGS.	MATL	WT/UNIT IN KGS	REMARKS
2	RIB		2	AAE11147		1.26	
1	CLOSING ANGLE R.H		1	AAH11212		5.58	

GROUP: 1-1 Under Frame | SURFACE AREA IN Sq.m.:365293.29 | WT/ASSY IN Kgs:

LIFTING PAD ASSY. RH

SCALE 1:5	SSE/D	V. kumar
	CHD	
ALT.	ALTD	
	DRN	SURESH KUMAR S/VISHNU

INDIAN RAILWAY STANDARDS
INTEGRAL COACH FACTORY, CHENNAI - 600038

SHEET 1 OF 1

VBS/NDTC/FAC

A0811018 | A3

DATE OF LATEST ALT.	DATE OF FIRST ISSUE	AME/SME
	28-02-2026	

REF.DRG.NO.-

A0811019

▽ ROUGH MACHINED	(01) ROUGH CLEANED
▽▽ FINISH MACHINED	(01b) BURRS REMOVED
▽▽▽ FINE FINISH MACHINED	(18) CHAMFERED

REVISIONS			
ALT.	ZONE	DESCRIPTION	APPROVED & DATE

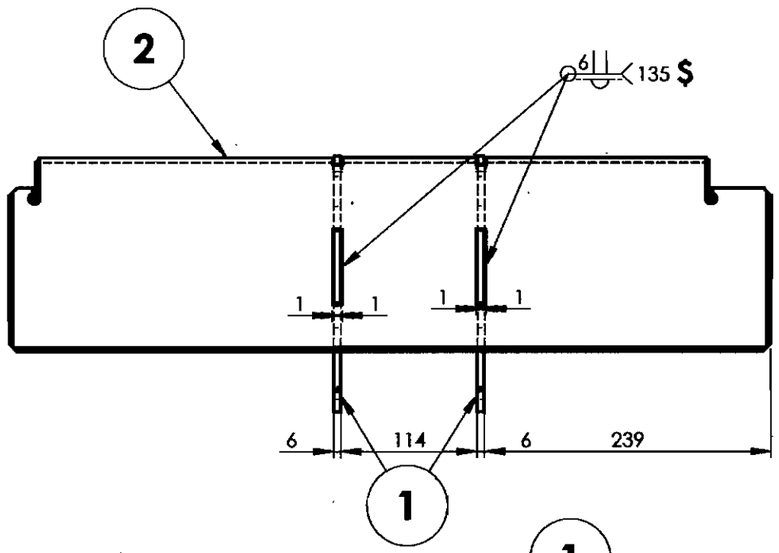

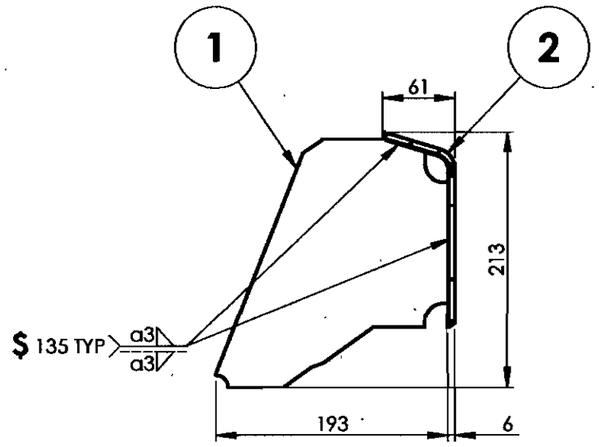

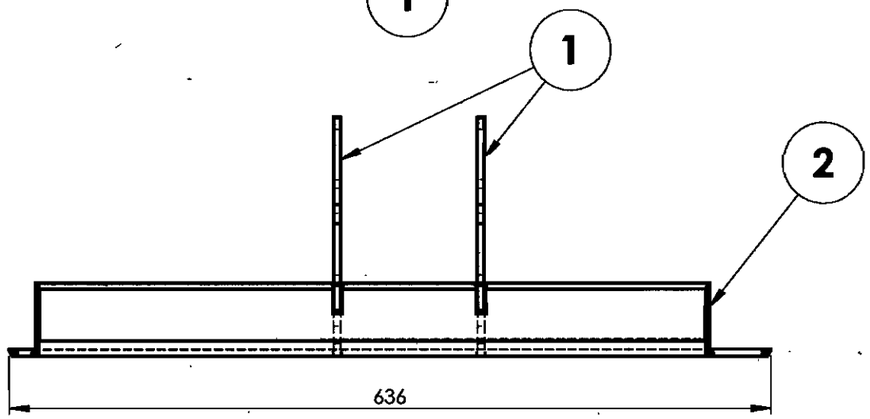

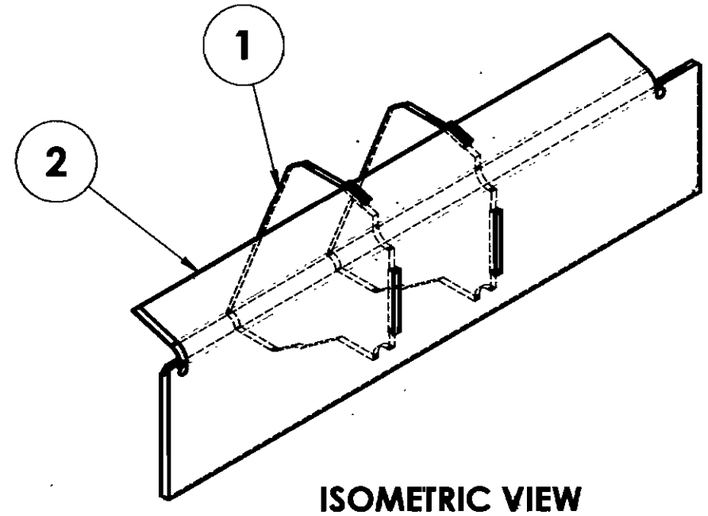

ISOMETRIC VIEW

NOTE:

1. ALL WELDING PERFORMANCE SHALL BE CP C2 UNLESS OTHERWISE SPECIFIED.
2. FOR WELDING TESTING PREFERENCES REFER DRG.NO.ICF/STD-9-0-998 AND FOR WELDING PROCEDURE SPECIFICATIONS REFER DRG.NO:ICF/STD-9-0-999.

$ 3. ITEMS-1&2 SHALL BE SUPPLIED LOOSE AND ASSEMBLED AT UNDERFRAME ASSEMBLY STAGE.

QTY.	DESCRIPTION	DIMENSIONS	ITEM NO.	REF.DRGS.	MATL	WT/UNIT IN KGS	REMARKS
1	CLOSING ANGLE L.H		2	AAH11214		5.58	
2	RIB		1	AAE11147		1.26	

GROUP: 1-1 | SURFACE AREA IN Sq.m.:0.365 | WT/ASSY IN Kgs:

LIFTING PAD ASSEMBLY L.H

SCALE 1:5	SSE/D	
	CHD	
ALT.	ALTD	
	DRN	S.SURESH KUMAR/ VISHNU

INDIAN RAILWAY STANDARDS
INTEGRAL COACH FACTORY, CHENNAI - 600038

SHEET 1 OF 1

VBS/NDTC/FAC

A0811019 A3

DATE OF LATEST ALT.	DATE OF FIRST ISSUE	AME/SME
	28-02-2026	

REF.DRG.NO.-

ALL DIMENSIONS ARE IN mm UNLESS OTHERWISE SPECIFIED. FOR UNTOLERANCED DIMENSIONS AND ROUGHNESS VALUES, REFER DRAWING NO ICF/STD-9-0-001.
ANY MANUAL ALTERATION SHALL AUTOMATICALLY RENDER THIS DRAWING INVALID. WELDING SYMBOLS ARE AS PER IS: 813-1986.
WEIGHT GIVEN IN DRAWING IS FOR INDICATIVE PURPOSE ONLY

A0911010

▽ ROUGH MACHINED	(01) ROUGH CLEANED
▽▽ FINISH MACHINED	(01b) BURRS REMOVED
▽▽▽ FINE FINISH MACHINED	(15) CHAMFERED

REVISIONS			
ALT.	ZONE	DESCRIPTION	APPROVED & DATE

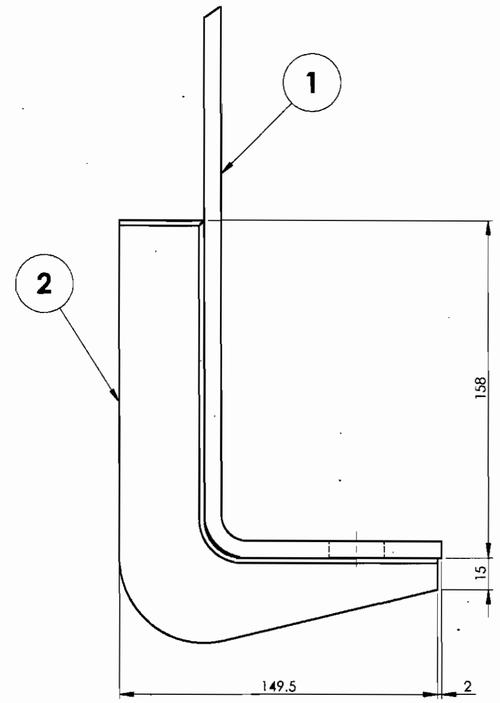

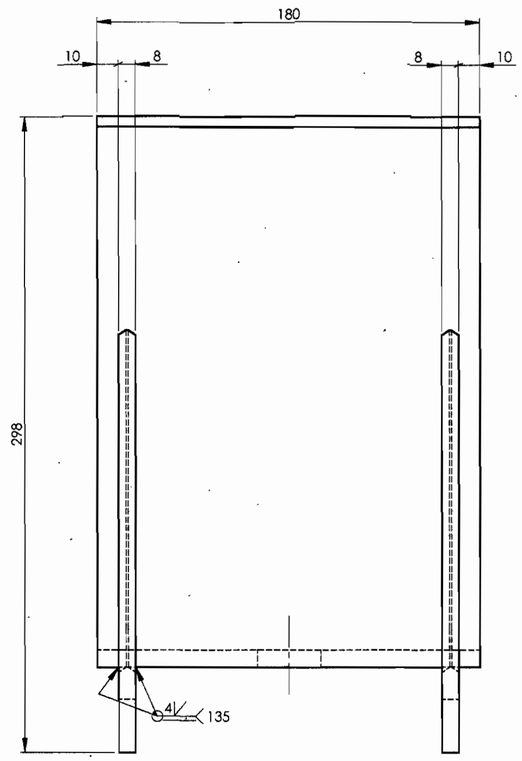

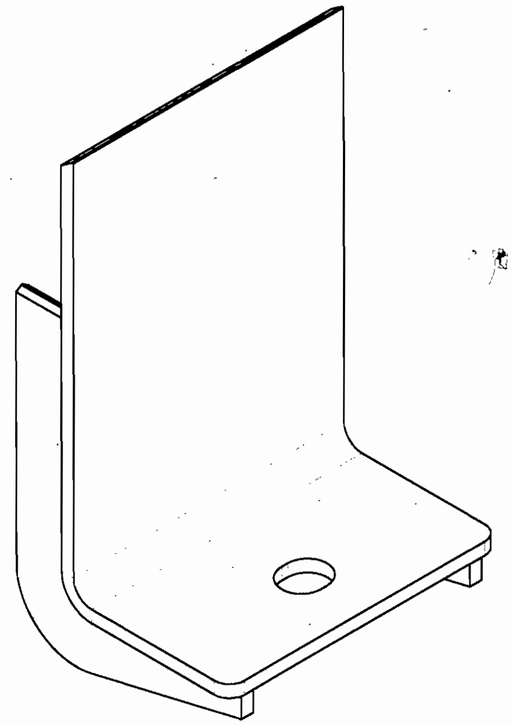

ISOMETRIC VIEW

ALL DIMENSIONS ARE IN mm UNLESS OTHERWISE SPECIFIED. FOR UNTOLERANCED DIMENSIONS AND ROUGHNESS VALUES, REFER DRAWING NO ICF/STD-9-0-001.
ANY MANUAL ALTERATION SHALL AUTOMATICALLY RENDER THIS DRAWING INVALID. WELDING SYMBOLS ARE AS PER IS:813-1986. WEIGHT GIVEN IN DRAWING IS FOR INDICATIVE PURPOSE ONLY

NOTE:-

1) FOR WELDING PROCEDURE SPECIFICATIONS(WPS) REF. DRG.NO: ICF/STD-9-0-999 AND FOR WELDING TEST PREFERENCES REFER TO DRG.NO: ICF/STD-9-0-998.

2) ALL WELD SPATTERS SHALL BE GROUND.

QTY.	DESCRIPTION	DIMENSIONS	ITEM NO.	REF.DRGS.	MATL	WT/UNIT IN KGS	REMARKS
2	RIB		2	AAK11168		0.65	
1	BRACKET		1	AAK11269		3.94	

GROUP: 1-1 Under Frame | SURFACE AREA IN Sq.m.: 0.186 | WT/ASSY IN Kgs:

BRACKET ASSEMBLY

SCALE 1:2 | SSE/D | CHD | ALT | ALTD | DRN: K.SETHURAMAN

INDIAN RAILWAY STANDARDS
INTEGRAL COACH FACTORY, CHENNAI - 600038

SHEET 1 OF 1

VBS//NDTC/CB

A0911010 A2

REF.DRG.NO.	DATE OF LATEST ALT.	DATE OF FIRST ISSUE	AME/SME
		27-02-2026	

A0911012

▽ ROUGH MACHINED	(01) ROUGH CLEANED
▽▽ FINISH MACHINED	(01B) BURRS REMOVED
▽▽▽ FINE FINISH MACHINED	(1.6) CHAMFERED

REVISIONS			
ALT.	ZONE	DESCRIPTION	APPROVED & DATE
a		R.M SIZE FOR ITEMS-1 & 2 ALTD, VIEWS UPDATED.	

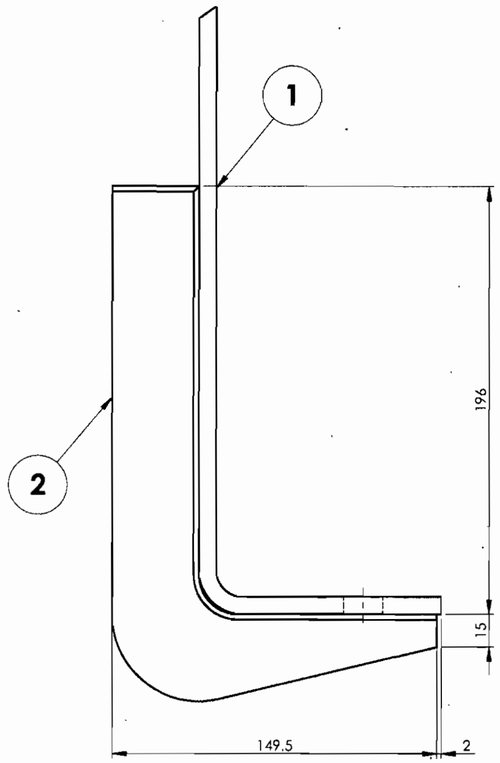

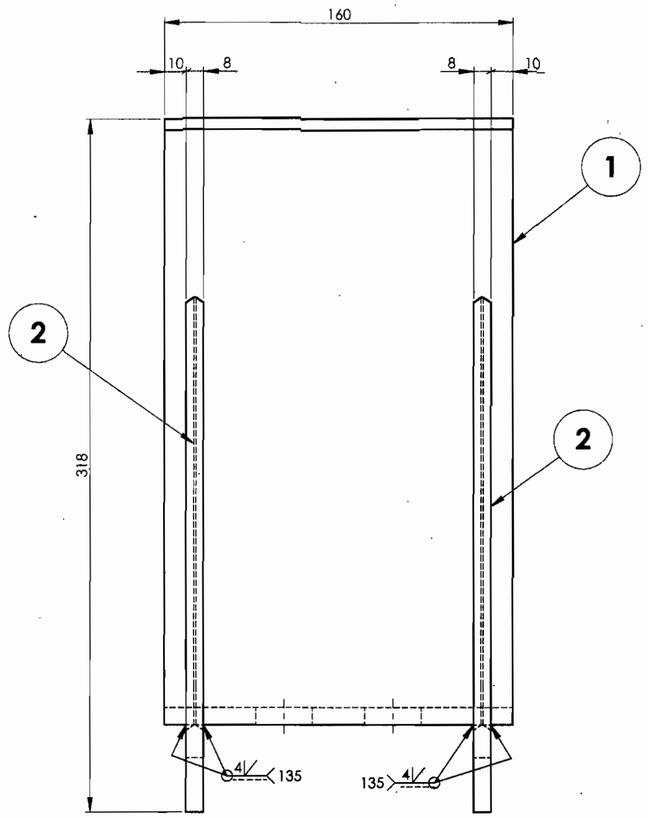

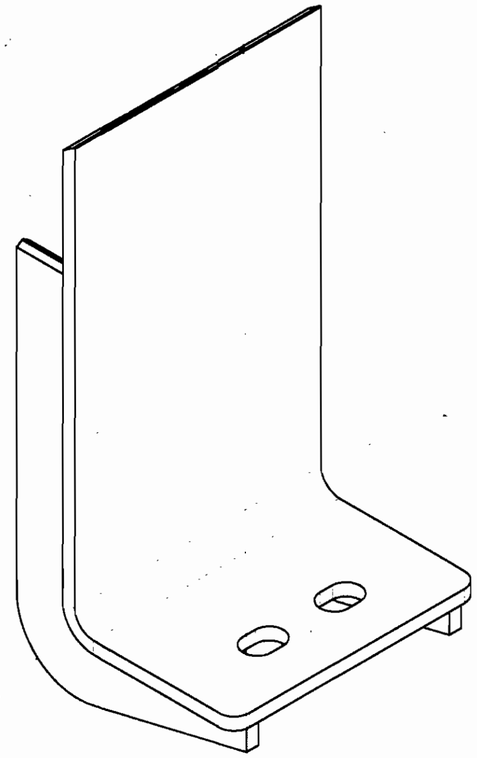

ISOMETRIC VIEW

ALL DIMENSIONS ARE IN mm UNLESS OTHERWISE SPECIFIED. FOR UNTOLERANCED DIMENSIONS AND ROUGHNESS VALUES, REFER DRAWING NO ICF/STD-9-0-001.
ANY MANUAL ALTERATION SHALL AUTOMATICALLY RENDER THIS DRAWING INVALID. WELDING SYMBOLS ARE AS PER IS:813-1986. WEIGHT GIVEN IN DRAWING IS FOR INDICATIVE PURPOSE ONLY

NOTE

1. ALL WELD PERFORMANCE CLASS SHALL BE CP C2 UNLESS OTHERWISE SPECIFIED.
2. FOR WELD TESTING PREFERENCES, REFER DRAWING NO ICF/STD-9-0-998.
3. FOR WELD PROCEDURE SPECIFICATION, REFER DRAWING NO ICF/STD-9-0-999
4. ALL WELD SPATTERS SHALL BE GROUND.

QTY.	DESCRIPTION	DIMENSIONS	ITEM NO.	REF.DRGS.	MATL	WT/UNIT IN KGS	REMARKS
2	RIB		2	AAK11318		0.75	
1	BRACKET		1	AAK11317		3.69	

GROUP: 1-1 Under Frame | SURFACE AREA IN Sq.m.: 0.185 | WT/ASSY IN Kgs:

BRACKET ASSEMBLY

SCALE 1:2 | SSE/D | P.Elango | CHD |
ALT a | ALTD | M.SIVAKUMAR | DRN | K.Sethuraman |

VBS/NDTC/CB

INDIAN RAILWAY STANDARDS
INTEGRAL COACH FACTORY, CHENNAI - 600038

SHEET 1 OF 1

A0911012 A2

28-07-2026	27-02-2026	
DATE OF LATEST ALT.	DATE OF FIRST ISSUE	AME/SME

REF.DRG.NO.

A1611031

ROUGH MACHINED	(01) ROUGH CLEANED
FINISH MACHINED	(01b) BURRS REMOVED
FINE FINISH MACHINED	(18) CHAMFERED

REVISIONS			
ALT.	ZONE	DESCRIPTION	APPROVED & DATE

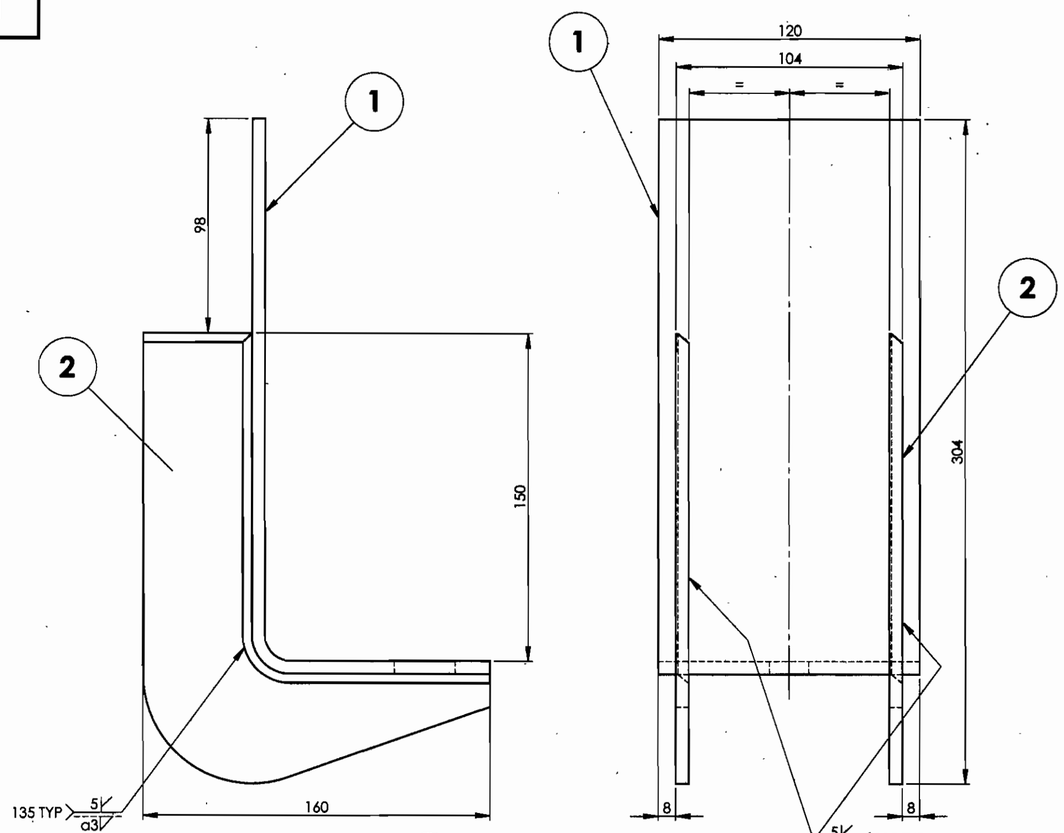

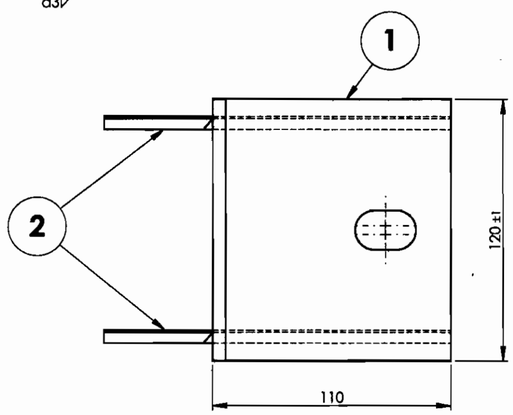

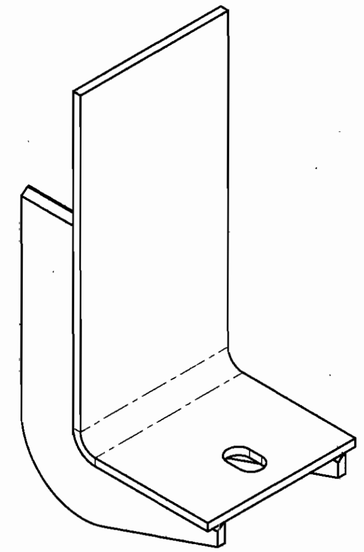

ISOMETRIC VIEW

NOTE:-

1) FOR WELDING PROCEDURE SPECIFICATIONS(WPS) REF. DRG.NO: ICF/STD-9-0-999 AND FOR WELDING TEST PREFERENCES REFER TO DRG.NO: ICF/STD-9-0-998.

2) ALL WELD SPATTERS SHALL BE GROUND.

QTY.	DESCRIPTION	DIMENSIONS	ITEM NO.	REF.DRGS.	MATL	WT/UNIT IN KGS	REMARKS
2	RIB FOR END PNEUMATIC PANEL		2	AAJ11826		0.61	
1	BRACKET FOR EPP		1	AAJ11825		1.96	

GROUP: 1-1 Under Frame | SURFACE AREA IN Sq.m.: 150020.05 | WT/ASSY IN Kgs:

MOUNTING BRACKET FOR END PNEUMATIC PANEL

SCALE 1:2	SSE/D	
	CHD	
ALT -	ALTD	
	DRN	G. SURESH BABU/VISHNU

INDIAN RAILWAY STANDARDS
INTEGRAL COACH FACTORY, CHENNAI - 600038

SHEET 1 OF 1

VBS/MC/CN/A

A1611031 A2

DATE OF LATEST ALT.	DATE OF FIRST ISSUE	AME/SME
	9-03-2026	

REF.DRG.NO.-

ALL DIMENSIONS ARE IN mm UNLESS OTHERWISE SPECIFIED. FOR UNTOLERANCED DIMENSIONS AND ROUGHNESS VALUES, REFER DRAWING NO ICF/STD-9-0-001.
ANY MANUAL ALTERATION SHALL AUTOMATICALLY RENDER THIS DRAWING INVALID. WELDING SYMBOLS ARE AS PER IS:813-1986. WEIGHT GIVEN IN DRAWING IS FOR INDICATIVE PURPOSE ONLY

A1611036

▽ ROUGH MACHINED	(01) ROUGH CLEANED
▽▽ FINISH MACHINED	(01b) BURRS REMOVED
▽▽▽ FINE FINISH MACHINED	(18) CHAMFERED

REVISIONS			
ALT.	ZONE	DESCRIPTION	APPROVED & DATE

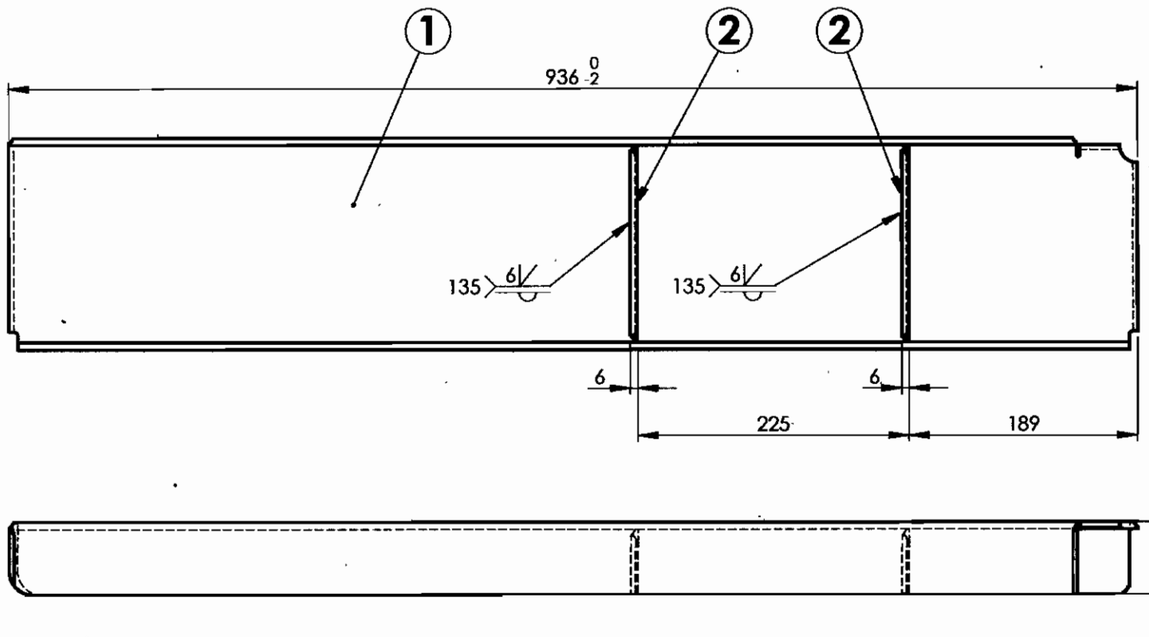

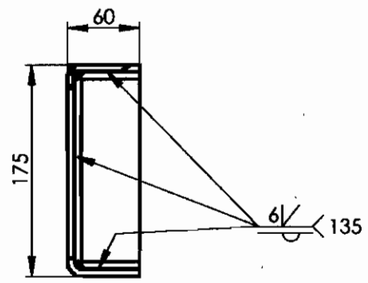

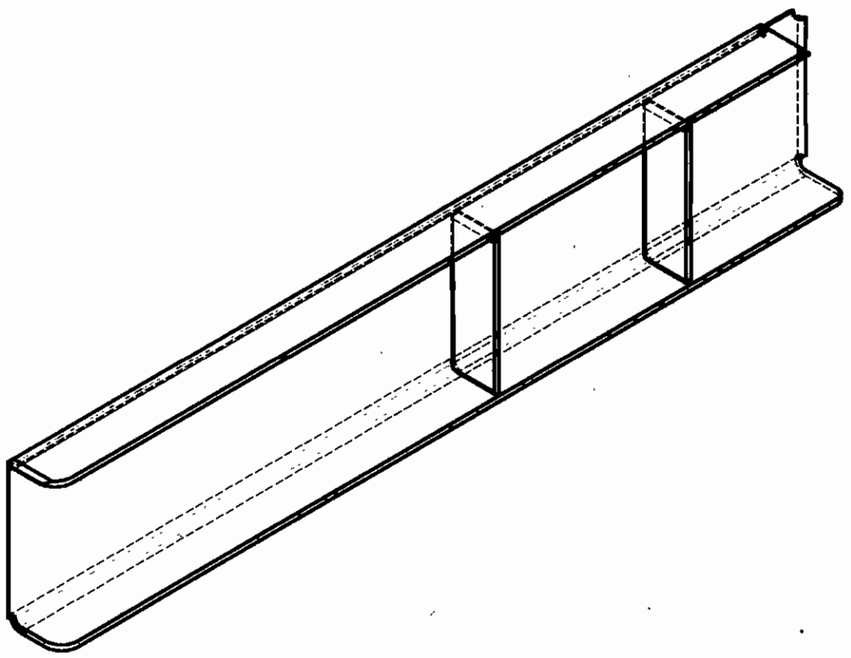

NOTE:-

1. FOR WELDING PROCDURE SPECIFICATIONS(WPS) ,REF. DRG NO: ICF/STD-9-0-999. AND FOR WELDING TEST PREFERENCES REFER TO DRG. NO. ICF/STD-9-0-998
2. ALL WELD SPATTERS SHALL BE GROUND.

QTY.	DESCRIPTION	DIMENSIONS	ITEM NO.	REF.DRGS.	MATL	WT/UNIT IN KGS	REMARKS
2	RIB FOR BIO TANK MOUNTING CHANNEL		2	AAK11247		0.40	
1	CHANNEL FOR BIO TANK		1	AAJ11835		12.14	

GROUP: 1-1 Under Frame | SURFACE AREA IN Sq.m.:0.559 | WT/ASSY IN Kgs:

BIOTANK BRACKET CHANNEL ASSEMBLY-1 LH

SCALE 1:5	SSE/D	
	CHD	
ALT.	ALTD	
	DRN	G. SURESH BABU

INDIAN RAILWAY STANDARDS
INTEGRAL COACH FACTORY, CHENNAI - 600038

SHEET 1 OF 1

VBS/MC/CN/A

A1611036 A3

DATE OF LATEST ALT.	DATE OF FIRST ISSUE	AME/SME
	11-03-2026	

REF.DRG.NO.-

ALL DIMENSIONS ARE IN mm UNLESS OTHERWISE SPECIFIED. FOR UNTOLERANCED DIMENSIONS AND ROUGHNESS VALUES, REFER DRAWING NO ICF/STD-9-0-001.
ANY MANUAL ALTERATION SHALL AUTOMATICALLY RENDER THIS DRAWING INVALID. WELDING SYMBOLS ARE AS PER EN ISO 2553.
WEIGHT GIVEN IN DRAWING IS FOR INDICATIVE PURPOSE ONLY

A1611038

ROUGH MACHINED	(01) ROUGH CLEANED
FINISH MACHINED	(01b) BURRS REMOVED
FINE FINISH MACHINED	(18) CHAMFERED

REVISIONS			
ALT.	ZONE	DESCRIPTION	APPROVED & DATE

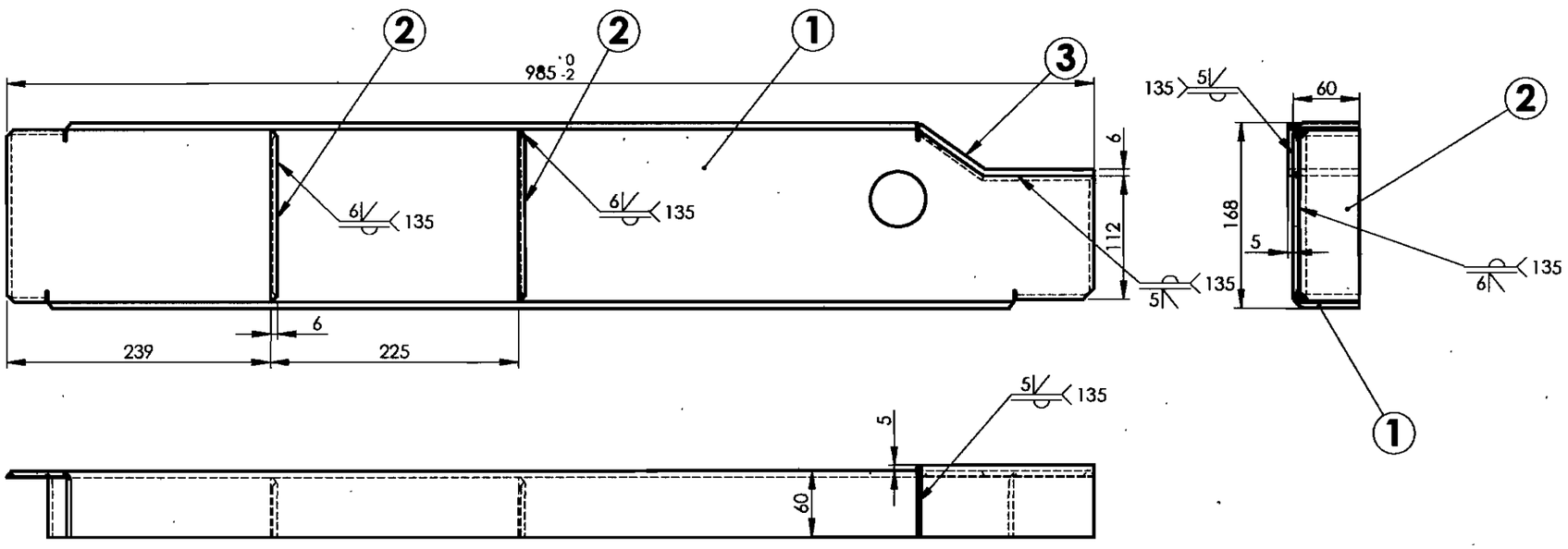

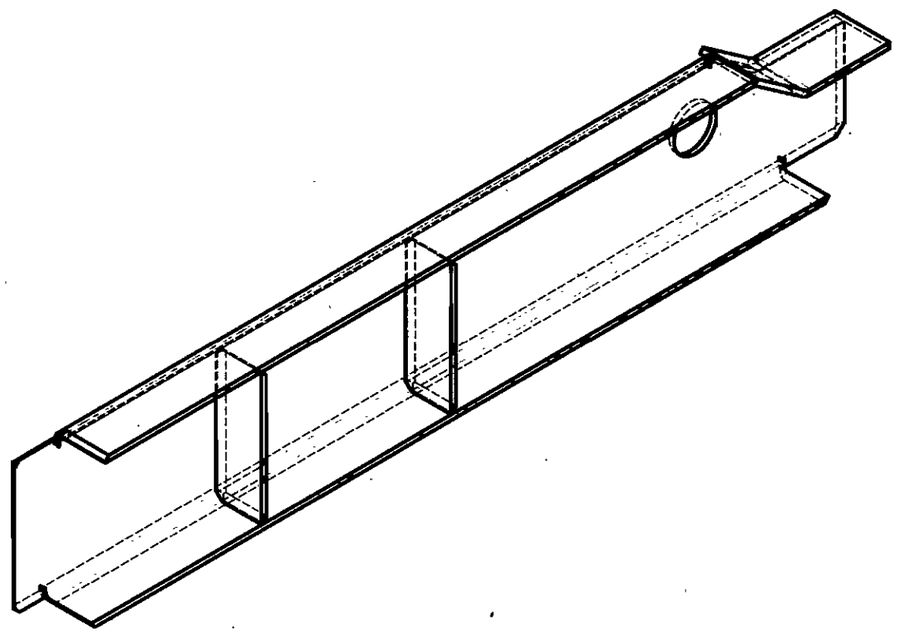

ALL DIMENSIONS ARE IN mm UNLESS OTHERWISE SPECIFIED. FOR UNTOLERANCED DIMENSIONS AND ROUGHNESS VALUES, REFER DRAWING NO ICF/STD-9-0-001.
ANY MANUAL ALTERATION SHALL AUTOMATICALLY RENDER THIS DRAWING INVALID. WELDING SYMBOLS ARE AS PER EN ISO 2553.
WEIGHT GIVEN IN DRAWING IS FOR INDICATIVE PURPOSE ONLY

NOTE:-

1. FOR WELDING PROCDURE SPECIFICATIONS(WPS) ,REF. DRG NO: ICF/STD-9-0-999. AND FOR WELDING TEST PREFERENCES REFER TO DRG. NO. ICF/STD-9-0-998
2. ALL WELD SPATTERS SHALL BE GROUND.

QTY.	DESCRIPTION	DIMENSIONS	ITEM NO.	REF.DRGS.	MATL	WT/UNIT IN KGS	REMARKS
1	ANGLE FOR BIO TANK MONTING		3	AAJ11838		0.53	
2	RIB		2	AAI11686		0.38	
1	CHANNEL FOR BIO TANK BRACKET		1	AAJ11837		11.38	

GROUP: 1-1 Under Frame | SURFACE AREA IN Sq.m.:0.553 | WT/ASSY IN Kgs:

BIOTANK MOUNTING CHANNEL ASSEMBLY-3

SCALE 1:5	SSE/D	V. Murugesh
	CHD	
ALT. -	ALTD	
	DRN	G. SURESH BABU

INDIAN RAILWAY STANDARDS
INTEGRAL COACH FACTORY, CHENNAI - 600038

SHEET 1 OF 1

VBS/MC/CN/A

A1611038 A3

	11-03-2026	
DATE OF LATEST ALT.	DATE OF FIRST ISSUE	AME/SME

REF.DRG.NO.-

AAA12091

▽ ROUGH MACHINED	ⓒ ROUGH CLEANED
▽▽ FINISH MACHINED	ⓑ BURRS REMOVED
▽▽▽ ULTRA FINISH MACHINED	ⓒ CHAMFERED

REVISIONS			
ALT	ZONE	DESCRIPTION	APPROVED & DATE

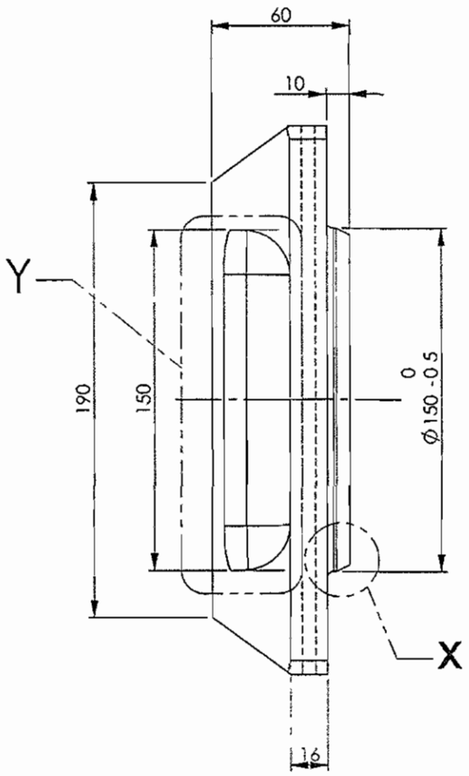

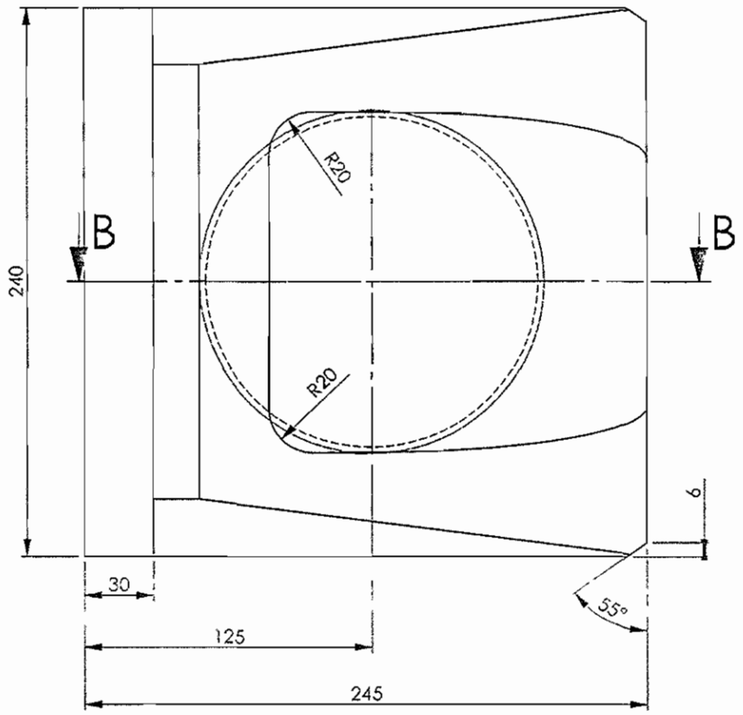

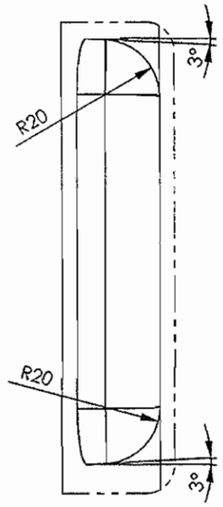

DETAIL Y
SCALE 1 : 2

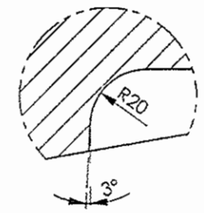

DETAIL Z
SCALE 1 : 2

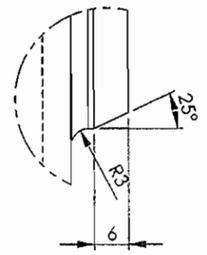

DETAIL X
SCALE 1 : 1

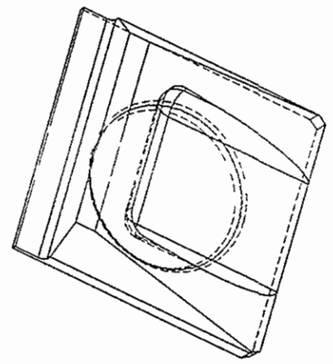

ISOMETRIC VIEW

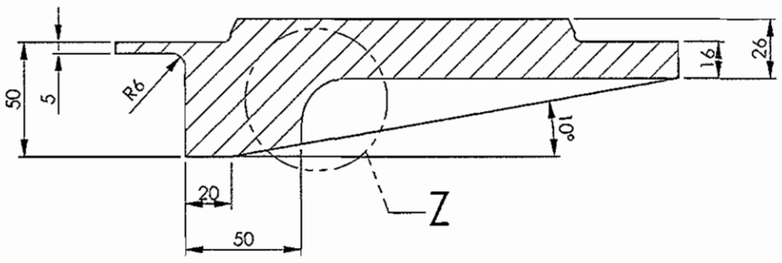

SECTION B-B

NOTE:-

ALTERNATIVELY MATERIAL TO SPEC DIN 17 100-1980,
St 52-3N MAY BE USED

QTY	DESCRIPTION	DIMENSIONS	ITEM NO.	REF. DRGS	MATL.SPEC.	WT/UNIT IN KGS	REMARKS
1	STOP	60x240x245	1		EN10025-5 2004 S355J2W+N	12 652	

GROUP: HEADSTOCK COMPLETE | SURFACE AREA IN Sq.m.: 0.152 | WT/ASSY IN Kgs 12.652

STOP

SCALE	SSE/D	N. Top
1:2.5	C-D	
ALT	A_T-D	
	DRN	S MUTHUKUMARAN

INDIAN RAILWAY STANDARDS
INTEGRAL COACH FACTORY, CHENNAI 600038

SHEET 1 OF 1

AAA12091 | A3

REF.DRG.NO.2 10113.0.03.124.102-ALT-"A"

DATE OF LATEST ALT	DATE OF FIRST ISSUE	AME/SME
	19-04-13	

ALL DIMENSIONS ARE IN mm UNLESS OTHERWISE SPECIFIED FOR UNTOLERANCED DIMENSIONS AND ROUGHNESS VALUES REFER DRAWING NO ICF/STD 9 0 001
ANY MANUAL ALTERATION SHALL AUTOMATICALLY RENDER THIS DRAWING INVALID WELDING SYMBOLS ARE AS PER IS 813 1986

AAA12126

▽ ROUGH VACHINED	○ ROUGH CLEANED	REVISIONS	
▽▽ NISH VACHINED	○ BURRS REMOVED	ALT / ZONE / DESCRIPTION	APPROVED & DATE
▽▽▽ NISH VACHINED	(8) CHAMFERED		

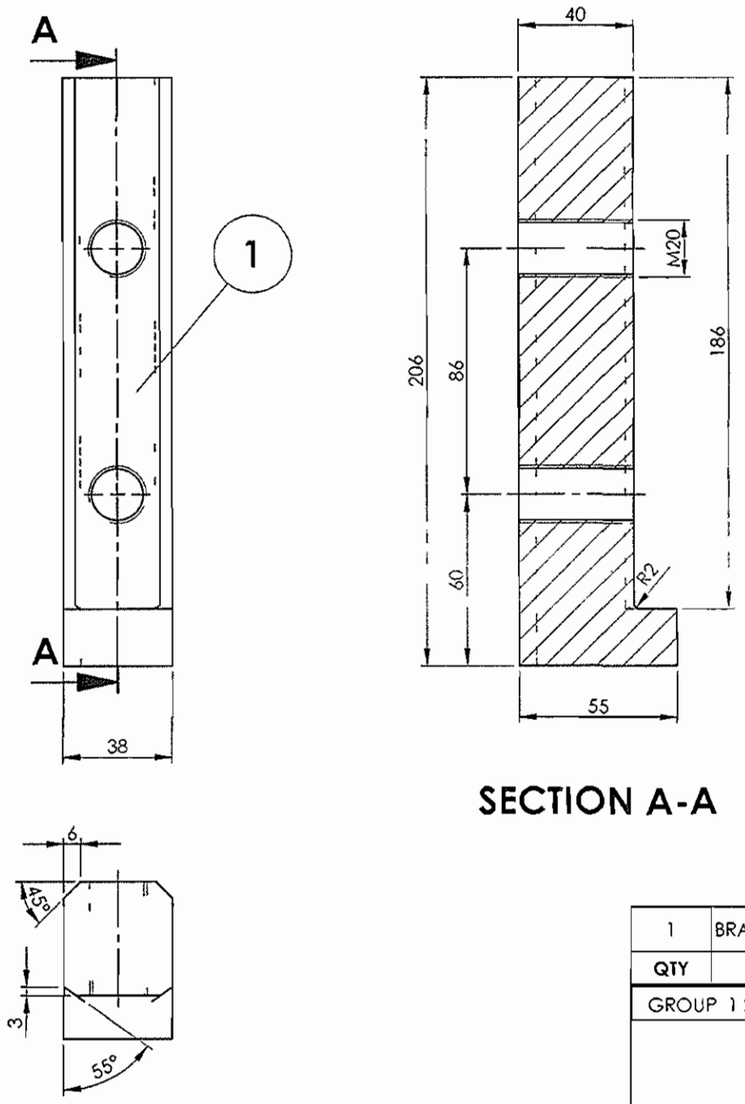

SECTION A-A

NOTE -

ALTERNATIVELY MATERIAL TO SPEC DIN 17 00 1980 St 52 3N MAY BE USED

QTY	DESCRIPTION	DIMENSIONS	ITEM NO.	REF DRGS	MATL SPEC	WT/UNIT IN KGS	REMARKS
1	BRACKET	38x55x206	1		EN10025 5 2004 S355J2W+N	2 311	

GROUP 1 2 | SURFACE AREA IN Sq m 0 038 | WT/ASSY IN Kgs 2 311

BRACKET

SCALE 1 2 | ALT | N | C-D | A D | DRN T J Kumaravelu

INDIAN RAILWAY STANDARDS

INTEGRAL COACH FACTORY CHENNAI 600038

SHEET 1 OF 1

AAA12126 A3

DATE OF LATEST ALT	DATE OF FIRST ISSUE	AMT/SME
	19-04-13	

REF DRG NO 3 10113 0 03 130 144 a t o

ALL DIMENSIONS ARE IN mm UNLESS OTHERWISE SPECIFIED FOR UNTOLERANCED DIMENSIONS AND ROUGHNESS VALUES REFER DRAWING NO CF/STD 9 0 001

ANY MANUAL ALTERATION SHALL AUTOMATICALLY RENDER THIS DRAWING INVALID WELDING SYMBOLS ARE AS PER IS 813 1986

AAA12127

▽ ROUGH MACHINED	○ ROUGH CLEANED
▽▽ FINISH MACHINED	○ BURRS REMOVED
▽▽▽ [illegible]	⊙ CHAMFERED

REVISIONS			
ALT	ZONE	DESCRIPTION	APPROVED & DATE

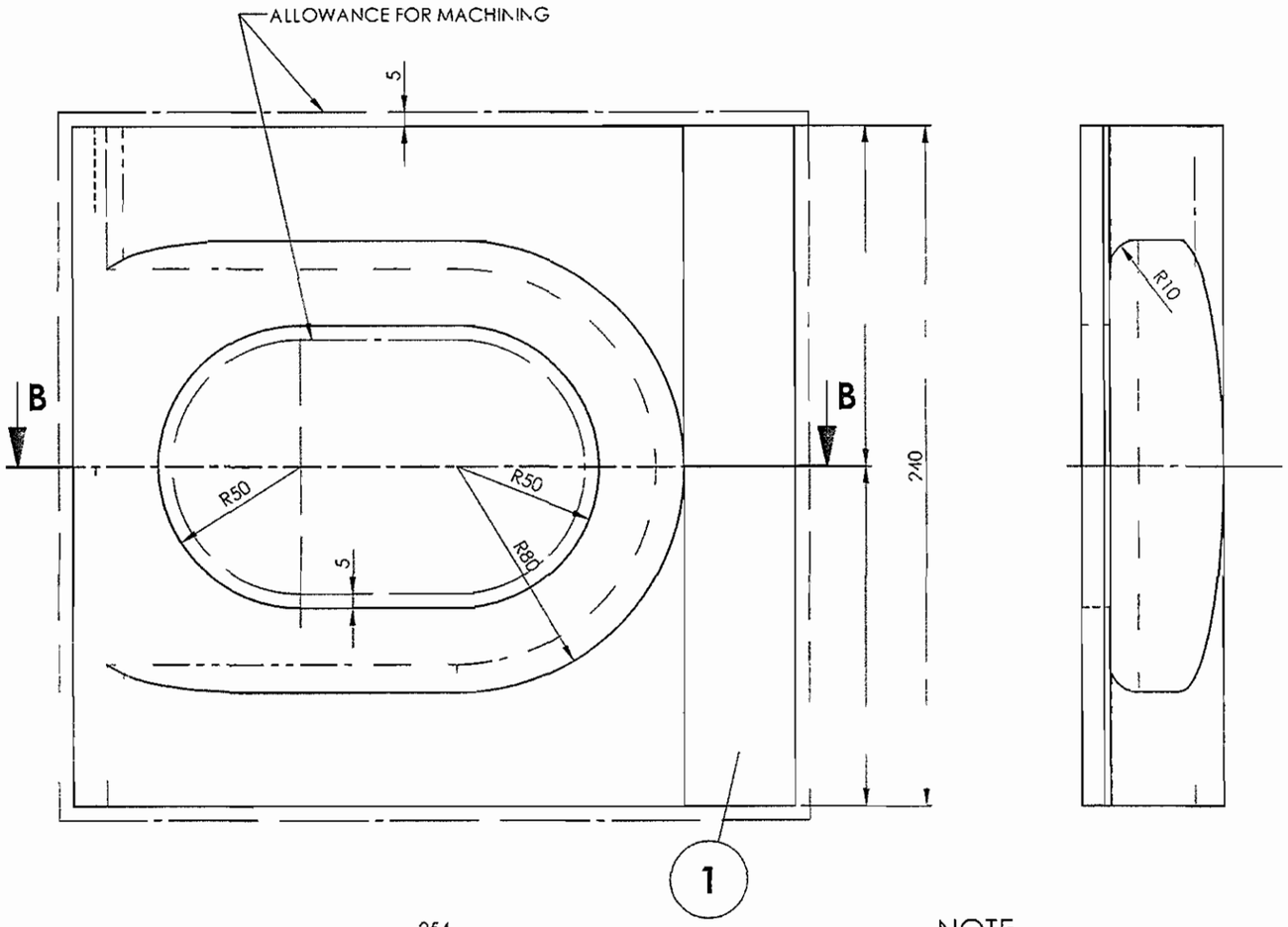

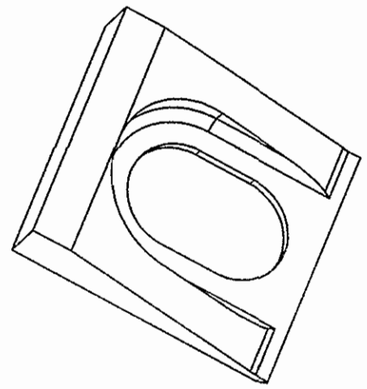

ISOMETRIC VIEW

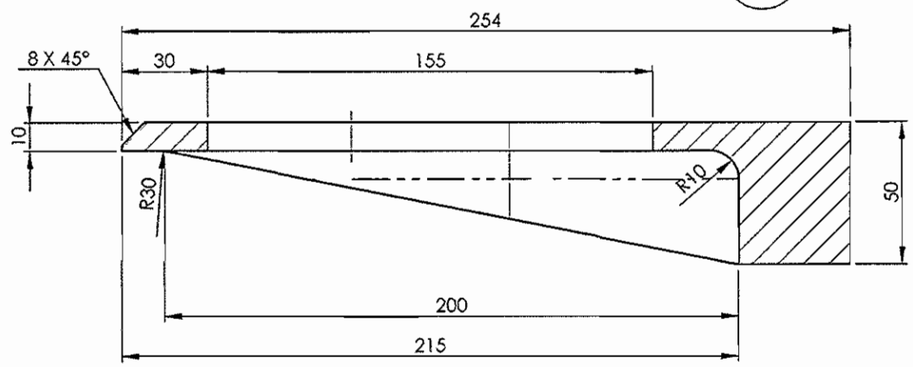

SECTION B-B

NOTE -

ALTERNATIVELY MATERIAL TO SPEC DIN 17 100 1980
St 52 3N MAY BE USED

QTY	DESCRIPTION	DIMENSIONS	ITEM NO.	REF DRGS	MATL SPEC	WT/UNIT IN KGS	REMARKS
1	STOP	50x250x264	1		EN10025 5 2004 S355J2W+N	9 991	

GROUP 1 2 | SURFACE AREA IN Sq m 0 139 | WT/ASSY IN Kgs 9 991

STOP

SCALE	SSL/D	N
1 2	C-D	
ALT	AL D	
	DRN	T J Kumarovelu

INDIAN RAILWAY STANDARDS

INTEGRAL COACH FACTORY CHENNAI 600038

SHEET 1 OF 1

AAA12127 A3

DATE OF ATES ALT	DATE OF FIRST ISSUE	AME/SM
	19-04-13	[signature] 15/4

ALL DIMENSIONS ARE IN mm UNLESS OTHERWISE SPECIFIED FOR UNTOLERANCED DIMENSIONS AND ROUGHNESS VALUES REFER DRAWING NO ICF/STD 9 0 00
ANY MANUAL ALTERATION SHALL AUTOMATICALLY RENDER THIS DRAWING INVALID WELD NOTE Y 180 5 ARE AS PER IS 813 1986

REF DRG NO 3 10113 0 03 130 145 ALT NIL

AAA12529

▽ ROUGH MACHINED	(0) ROUGH CLEANED
▽▽ FINISH MACHINED	(0.5) BURRS REMOVED
▽▽▽ VERY FINE FINISH MACHINED	(1.6) CHAMFERED

REVISIONS			
ALT.	ZONE	DESCRIPTION	APPROVED & DATE
a	---	ELONGATED SLOT-3NOS. AND DETAIL-B ADDED.	

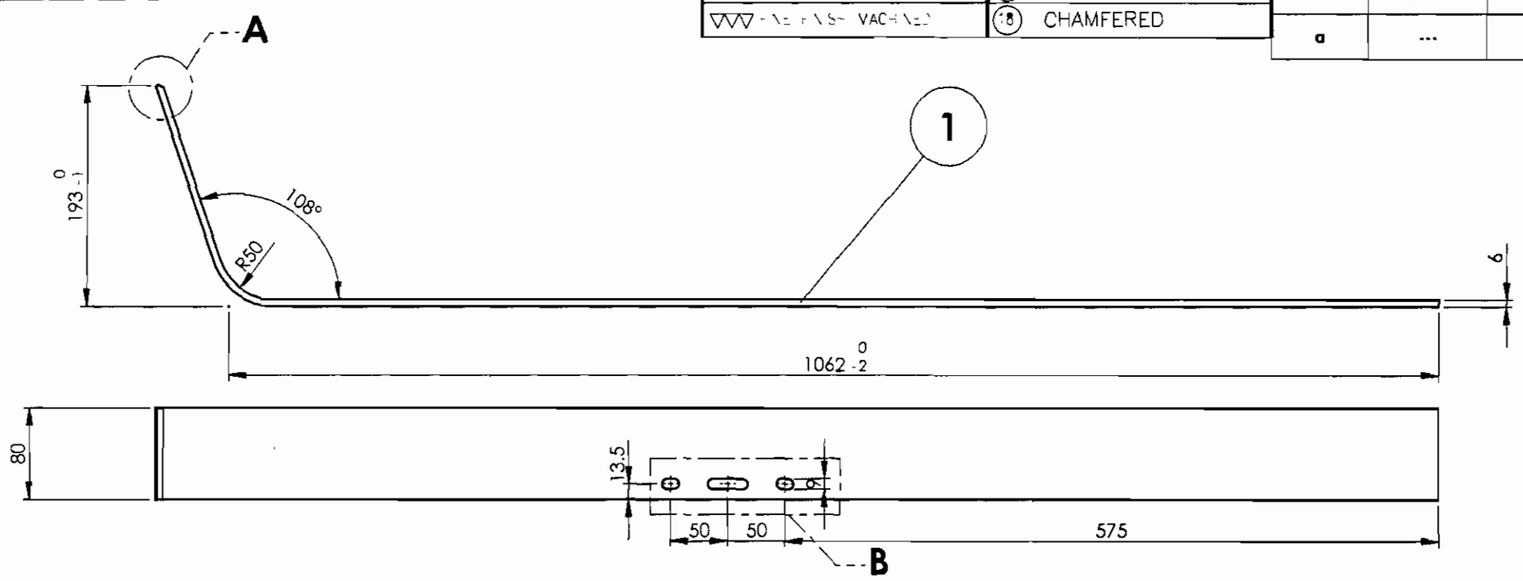

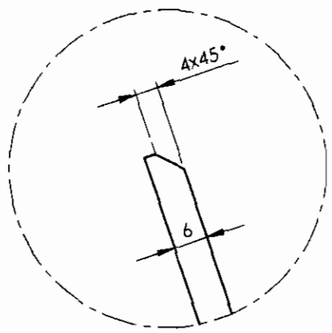

DETAIL A
SCALE 1 : 1

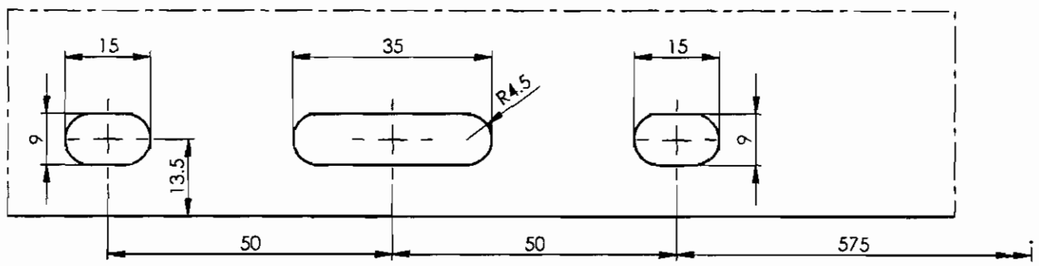

DETAIL B
SCALE 1 : 1

ALL DIMENSIONS ARE IN mm UNLESS OTHERWISE SPECIFIED FOR UNTOLERANCED DIMENSIONS AND ROUGHNESS VALUES, REFER DRAWING NO ICF/STD-9-0-001
ANY MANUAL ALTERATION SHALL AUTOMATICALLY RENDER THIS DRAWING INVALID. WELDING SYMBOLS ARE AS PER IS: 813-1986
WEIGHT GIVEN IN DRAWING IS FOR INDICATIVE PURPOSE ONLY

1	ANGLE	6x80x1251	1		IRS M-41-1997	4.68	
Default	DESCRIPTION	DIMENSIONS	ITEM NO	REF. DRGS	MATL.SPEC.	WT/UNIT IN KGS	REMARKS

GROUP: 1-2 | SURFACE AREA IN Sq.m.: | WT/ASSY IN Kgs:

ANGLE

SCALE 1:5	SSE/D	
	CHD	
ALT. a	ALTD	SURESH KUMAR S
	DRN	M.SIVAKUMAR

INDIAN RAILWAY STANDARDS
INTEGRAL COACH FACTORY, CHENNAI - 600038

SHEET 1 OF 1

AAA12529 | A3

02-2023	-	
DATE OF LATEST ALT.	DATE OF FIRST ISSUE	AME/SME

REF.DRG.NO.-

AAA12540

ROUGH MACHINED	(01) ROUGH CLEANED
FINISH MACHINED	(01b) BURRS REMOVED
FINE FINISH MACHINED	(18) CHAMFERED

REVISIONS		
ALT.	DESCRIPTION	APPROVED & DATE
a	DESIGN & R M SIZE REVISED.	

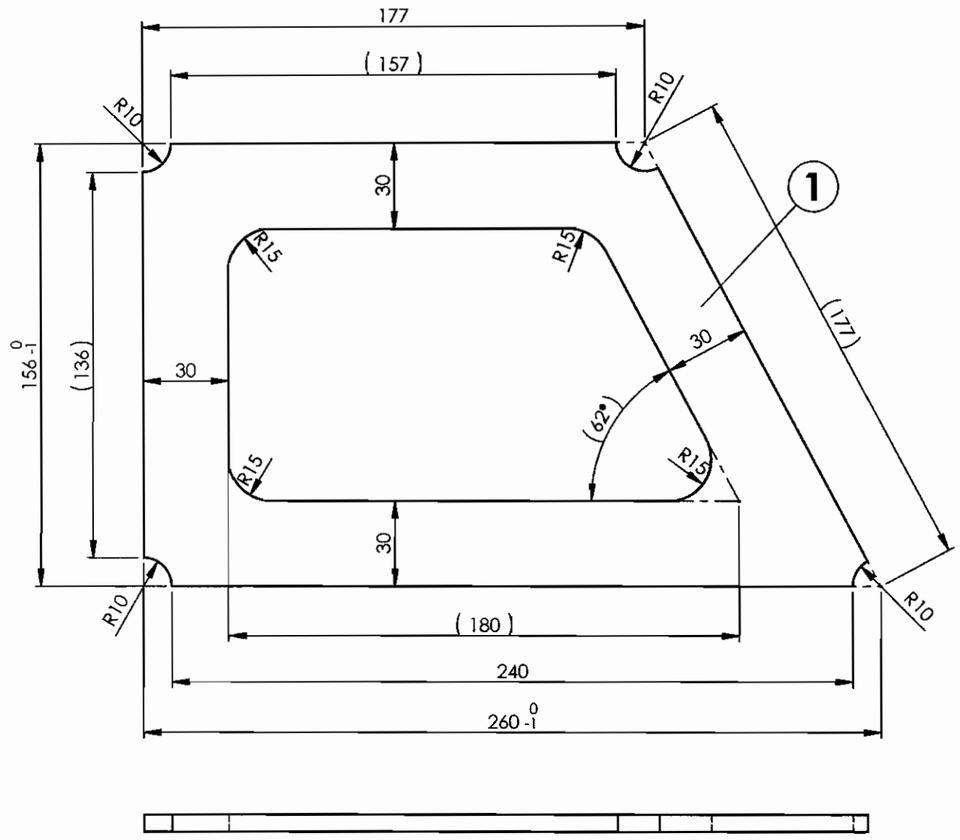

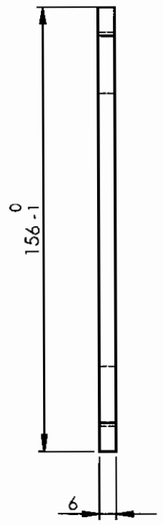

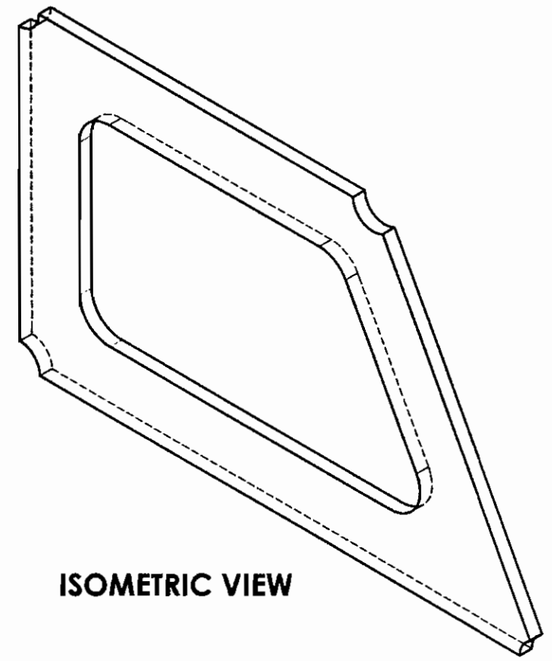

ISOMETRIC VIEW

ALL DIMENSIONS ARE IN mm UNLESS OTHERWISE SPECIFIED. FOR UNTOLERANCED DIMENSIONS AND ROUGHNESS VALUES, REFER DRAWING NO ICF/STD-9-0-001.
ANY MANUAL ALTERATION SHALL AUTOMATICALLY RENDER THIS DRAWING INVALID. WELDING SYMBOLS ARE AS PER IS: 813-1986.
WEIGHT GIVEN IN DRAWING IS FOR INDICATIVE PURPOSE ONLY

QTY	DESCRIPTION	DIMENSIONS	ITEM NO.	REF. DRGS	MATL.SPEC.	WT/UNIT IN KGS	REMARKS
1	BRACKET	6 X 156 X 260	1		IRS M-41-1997	0.90	

GROUP: 1-2 | SURFACE AREA IN Sq.m.: | WT/ASSY IN Kgs:

BRACKET

SCALE 1:2	SSE/D	
	CHD	
ALT. a	ALTD	A.V.V.Srinivas
	DRN	M.SIVAKUMAR

REF.DRG.NO.-

07-08-2023	25-10-2017	
DATE OF LATEST ALT.	DATE OF FIRST ISSUE	AME/SME

INDIAN RAILWAY STANDARDS
INTEGRAL COACH FACTORY, CHENNAI - 600038

SHEET 1 OF 1

AAA12540 A3

AAA13451

▽ ROUGH MACHINED	(01) ROUGH CLEANED
▽▽ FINISH MACHINED	(01b) BURRS REMOVED
▽▽▽ FINE FINISH MACHINED	(18) CHAMFERED

REVISIONS			
ALT.	ZONE	DESCRIPTION	APPROVED & DATE

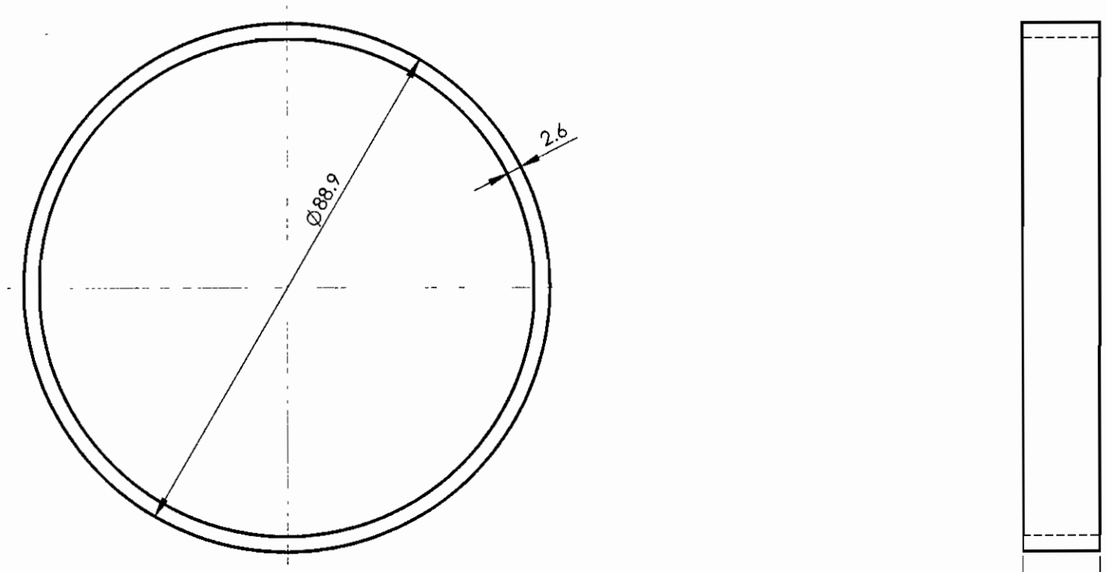

ALL DIMENSIONS ARE IN mm UNLESS OTHERWISE SPECIFIED. FOR UNTOLERANCED DIMENSIONS AND ROUGHNESS VALUES, REFER DRAWING NO ICF/STD-9-0-001.
ANY MANUAL ALTERATION SHALL AUTOMATICALLY RENDER THIS DRAWING INVALID. WELDING SYMBOLS ARE AS PER EN ISO 2553.
WEIGHT GIVEN IN DRAWING IS FOR INDICATIVE PURPOSE ONLY

REF.DRG.NO.-

1	STIFFENER	OD 88.9x13	1		IS:17876 X04Cr19Ni9	0.07	Thickness=2.6
QTY	DESCRIPTION	DIMENSIONS	ITEM NO.	REF. DRGS	MATL.SPEC.	WT/UNIT IN KGS	REMARKS

GROUP: 1-3 Trough Floor | SURFACE AREA IN Sq.m.: | WT/ASSY IN Kgs:

STIFFENER

SCALE	SSE/D	
1:1	CHD	
ALT. -	ALTD	
	DRN	nagarajand

-	27-11-2024	
DATE OF LATEST ALT.	DATE OF FIRST ISSUE	AME/SME

INDIAN RAILWAY STANDARDS
INTEGRAL COACH FACTORY, CHENNAI - 600038

SHEET 1 OF 1

AAA13451 A3

AAA13472

▽ ROUGH MACHINED	(01) ROUGH CLEANED
▽▽ FINISH MACHINED	(BR) BURRS REMOVED
▽▽▽ FINE FINISH MACHINED	(CH) CHAMFERED

REVISIONS			
ALT.	ZONE	DESCRIPTION	APPROVED & DATE
a		DESIGN REVISED	Sd/-
b		DIA. OF LIFTING HOLES, MATERIAL SPEC. & NOTES UPDATED	

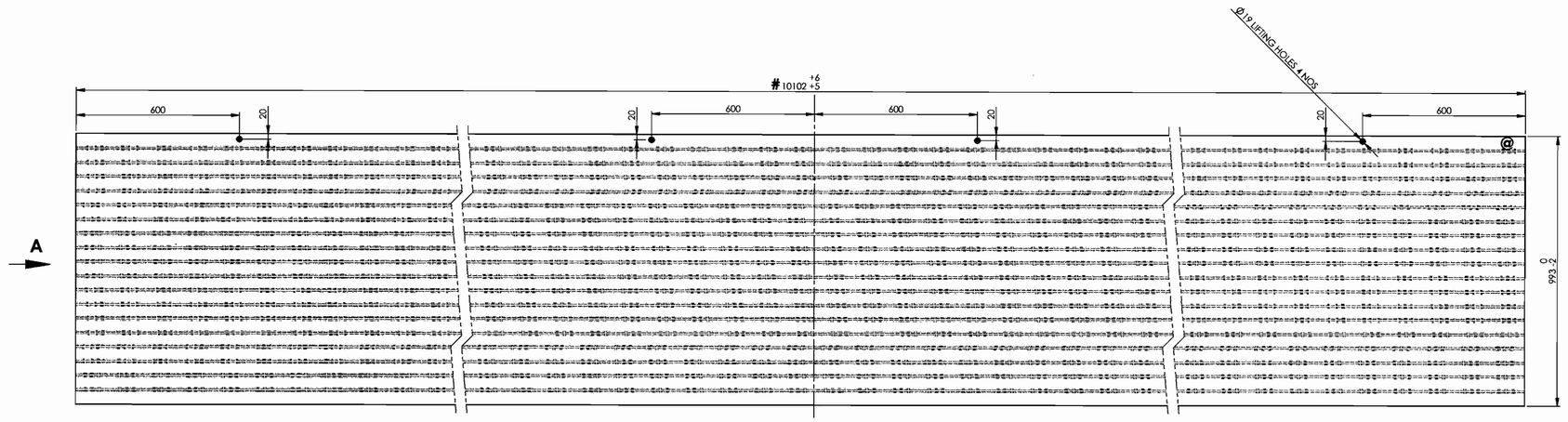

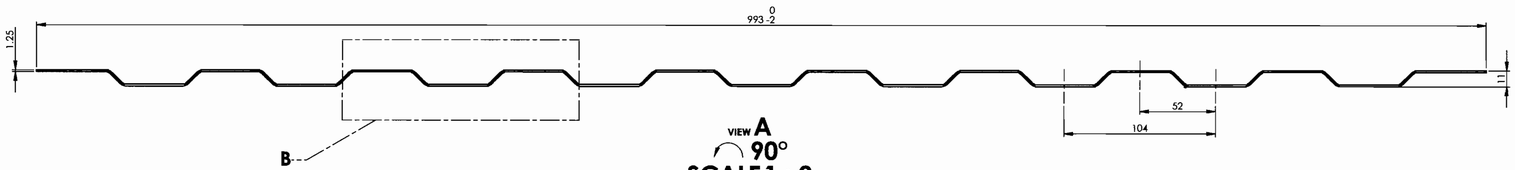

VIEW A
90°
SCALE 1 : 2

TENTATIVE

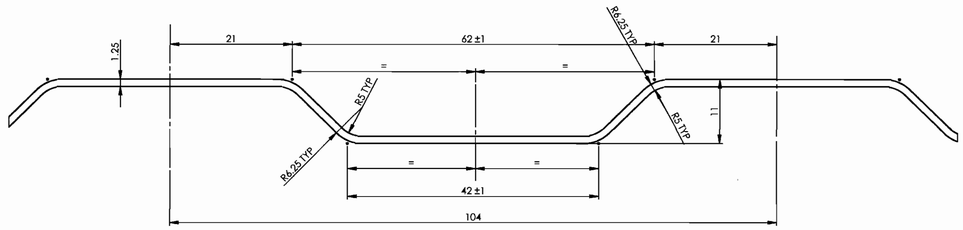

DETAIL B
SCALE 2 : 1 (TYPICAL)

NOTE:

A. TOLERANCES:

1. SECTION BOW : MAX 8 mm
2. LONGITUDINAL BOW : MAX 1mm/MTR
3. TWIST : 1° PER METRE
4. WAVINESS/FLATNESS : MAX 4 mm
5. DIAGONAL DISTANCE : MAX 3 mm
6. WIDTH OF THE COMPONENT : 993 0/-2 mm
7. DEPTH OF CORRUGATION : 11 ± 0.5 mm
8. THICKNESS OF MATERIAL : 1.25 ± 0.08 mm

@ B. SUPPLIER'S NAME, S.No, MONTH & YEAR OF MANUFACTURE TO BE PUNCHED IN 6mm HEIGHT.

C. NECESSARY SHRINKAGE ALLOWANCE 1 mm/METER (APPROX.) MAY BE GIVEN.

D. SHRINKAGE ALLOWANCE HAS BEEN CONSIDERED IN THE TOLERANCE GIVEN FOR LENGTH(L).

ALL DIMENSIONS ARE IN mm UNLESS OTHERWISE SPECIFIED. FOR UNTOLERANCED DIMENSIONS AND ROUGHNESS VALUES, REFER DRAWING NO.ICF/STD-9-0-001.
ANY MANUAL ALTERATION SHALL AUTOMATICALLY RENDER THIS DRAWING INVALID. WELDING SYMBOLS ARE AS PER EN ISO 2553. WEIGHT GIVEN IN DRAWING IS FOR INDICATIVE PURPOSE ONLY.

QTY.	DESCRIPTION	DIMENSIONS	ITEM NO.	REF. DRGS	MATL.SPEC.	WT/UNIT IN KGS	REMARKS
1	TROUGH FLOOR PART	1.25 x 1056 x L	1		RDSO SPEC C-K201 X2 Cr Ni N 18 7	104.67	

GROUP: 1-3 Trough Floor | SURFACE AREA IN Sq.m.: | WT/ASSY IN Kgs:

TROUGH FLOOR PART

SCALE 1:5 | SSE/D | CHD

ALT. b | ALTD VISHNU PRASAD.T | DRN G. SURESH BABU/VISHNU

INDIAN RAILWAY STANDARDS
INTEGRAL COACH FACTORY, CHENNAI - 600038

SHEET 1 OF 1

AAA13472 A1

DATE OF LATEST ALT.	DATE OF FIRST ISSUE	
06-02-2026	30-01-2026	AME/SME

REF.DRG.NO.:-

AAA13498

▽ ROUGH MACHINED	(01) ROUGH CLEANED
▽▽ FINISH MACHINED	(11) BURRS REMOVED
▽▽▽ FINE FINISH MACHINED	(18) CHAMFERED

REVISIONS			
ALT.	ZONE	DESCRIPTION	APPROVED & DATE

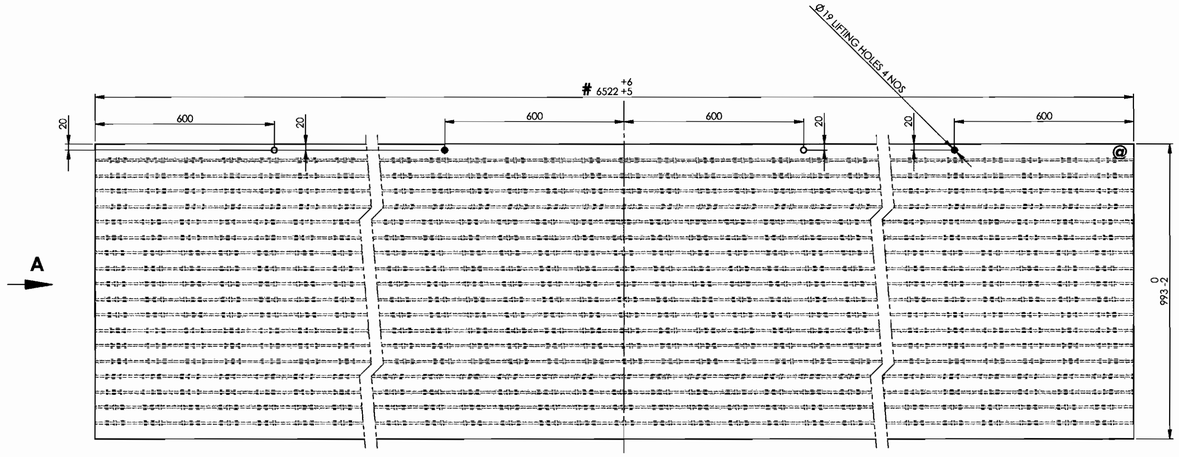

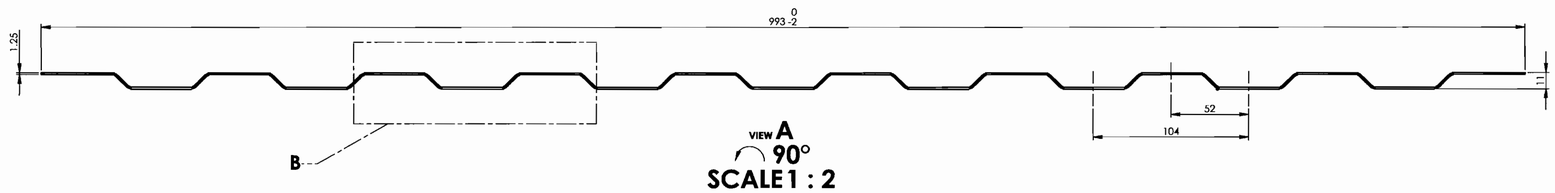

VIEW A
90°
SCALE 1 : 2

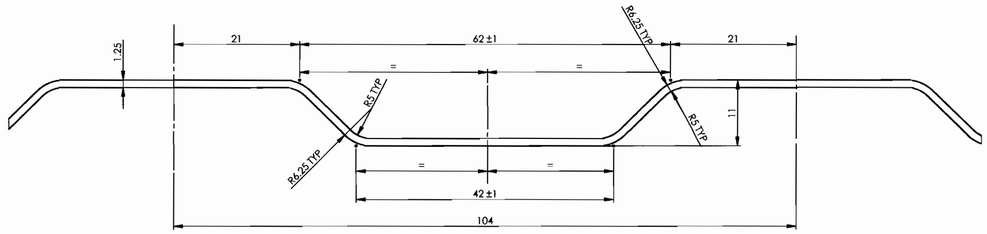

DETAIL B
SCALE 2 : 1 (TYPICAL)

NOTE:

A. TOLERANCES:

1. SECTION BOW : MAX 8 mm
2. LONGITUDINAL BOW : MAX 1mm/MTR
3. TWIST : 1° PER METRE
4. WAVINESS/FLATNESS : MAX 4 mm
5. DIAGONAL DISTANCE : MAX 3 mm
6. WIDTH OF THE COMPONENT : 993 0/-2 mm
7. DEPTH OF CORRUGATION : 11 ± 0.5 mm
8. THICKNESS OF MATERIAL : 1.25 ± 0.08 mm

@ B. SUPPLIER'S NAME, S.No, MONTH & YEAR OF MANUFACTURE TO BE PUNCHED IN 6mm HEIGHT.

C. NECESSARY SHRINKAGE ALLOWANCE 1 mm/METER (APPROX.) MAY BE GIVEN.

D. SHRINKAGE ALLOWANCE HAS BEEN CONSIDERED IN THE TOLERANCE GIVEN FOR LENGTH(L).

ALL DIMENSIONS ARE IN mm UNLESS OTHERWISE SPECIFIED. FOR UNTOLERANCED DIMENSIONS AND ROUGHNESS VALUES, REFER DRAWING NO ICF/STD-9-0-001.
ANY MANUAL ALTERATION SHALL AUTOMATICALLY RENDER THIS DRAWING INVALID. WELDING SYMBOLS ARE AS PER EN ISO 2553. WEIGHT GIVEN IN DRAWING IS FOR INDICATIVE PURPOSE ONLY.

QTY.	DESCRIPTION	DIMENSIONS	ITEM NO.	REF. DRGS	MATL.SPEC.	WT/UNIT IN KGS	REMARKS
1	TROUGH FLOOR PART	1.25 x 1056 x L	1		RDSO SPEC C-K201 X2 Cr Ni N 18 7	68.86	

GROUP: 1-3 Trough Floor | SURFACE AREA IN Sq.m.: | WT/ASSY IN Kgs:

TROUGH FLOOR PART

SCALE 1:5 | SSE/D | CHD: A SURESH | ALT. | ALTD: - | DRN: D Nagarajan

INDIAN RAILWAY STANDARDS
INTEGRAL COACH FACTORY, CHENNAI - 600038

SHEET 1 OF 1

AAA13498 A1

-	01-07-2026	AME/SME
DATE OF LATEST ALT.	DATE OF FIRST ISSUE	

REF.DRG.NO.-

AAA13500

▽ ROUGH MACHINED	(01) ROUGH CLEANED
▽▽ FINISH MACHINED	(01b) BURRS REMOVED
▽▽▽ FINE FINISH MACHINED	(18) CHAMFERED

REVISIONS			
ALT.	ZONE	DESCRIPTION	APPROVED & DATE

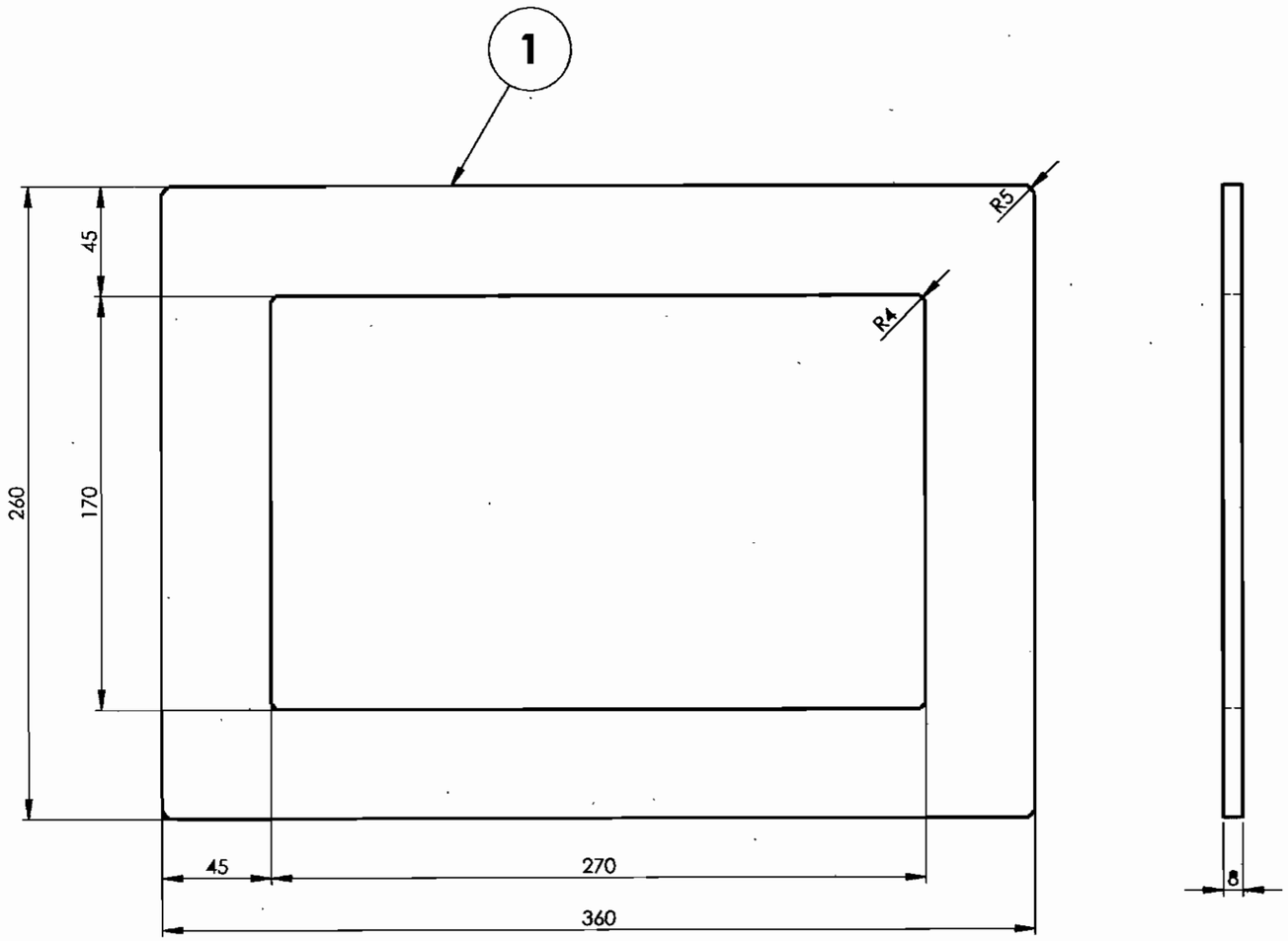

ALL DIMENSIONS ARE IN mm UNLESS OTHERWISE SPECIFIED. FOR UNTOLERANCED DIMENSIONS AND ROUGHNESS VALUES, REFER DRAWING NO ICF/STD-9-0-001.
ANY MANUAL ALTERATION SHALL AUTOMATICALLY RENDER THIS DRAWING INVALID. WELDING SYMBOLS ARE AS PER EN ISO 2553.
WEIGHT GIVEN IN DRAWING IS FOR INDICATIVE PURPOSE ONLY

QTY.	DESCRIPTION	DIMENSIONS	ITEM NO.	REF. DRGS	MATL.SPEC.	WT/UNIT IN KGS	REMARKS
1	BACK PIECE	8x260x360	1		RDSO SPEC C-K201 X5 Cr Ni 18 10	3.05	

GROUP: 1-3 Trough Floor | SURFACE AREA IN Sq.m.: | WT/ASSY IN Kgs:

BACK PIECE

SCALE	SSE/D	
1:5	CHD	A SURESH
ALT. -	ALTD	
	DRN	D Nagarajan

INDIAN RAILWAY STANDARDS
INTEGRAL COACH FACTORY, CHENNAI - 600038

SHEET 1 OF 1

AAA13500 | A3

-	01-07-2026	
DATE OF LATEST ALT.	DATE OF FIRST ISSUE	AME/SME

REF.DRG.NO.-

AAA13501

ROUGH MACHINED	(01) ROUGH CLEANED
FINISH MACHINED	(01b) BURRS REMOVED
FINE FINISH MACHINED	(18) CHAMFERED

REVISIONS			
ALT.	ZONE	DESCRIPTION	APPROVED & DATE

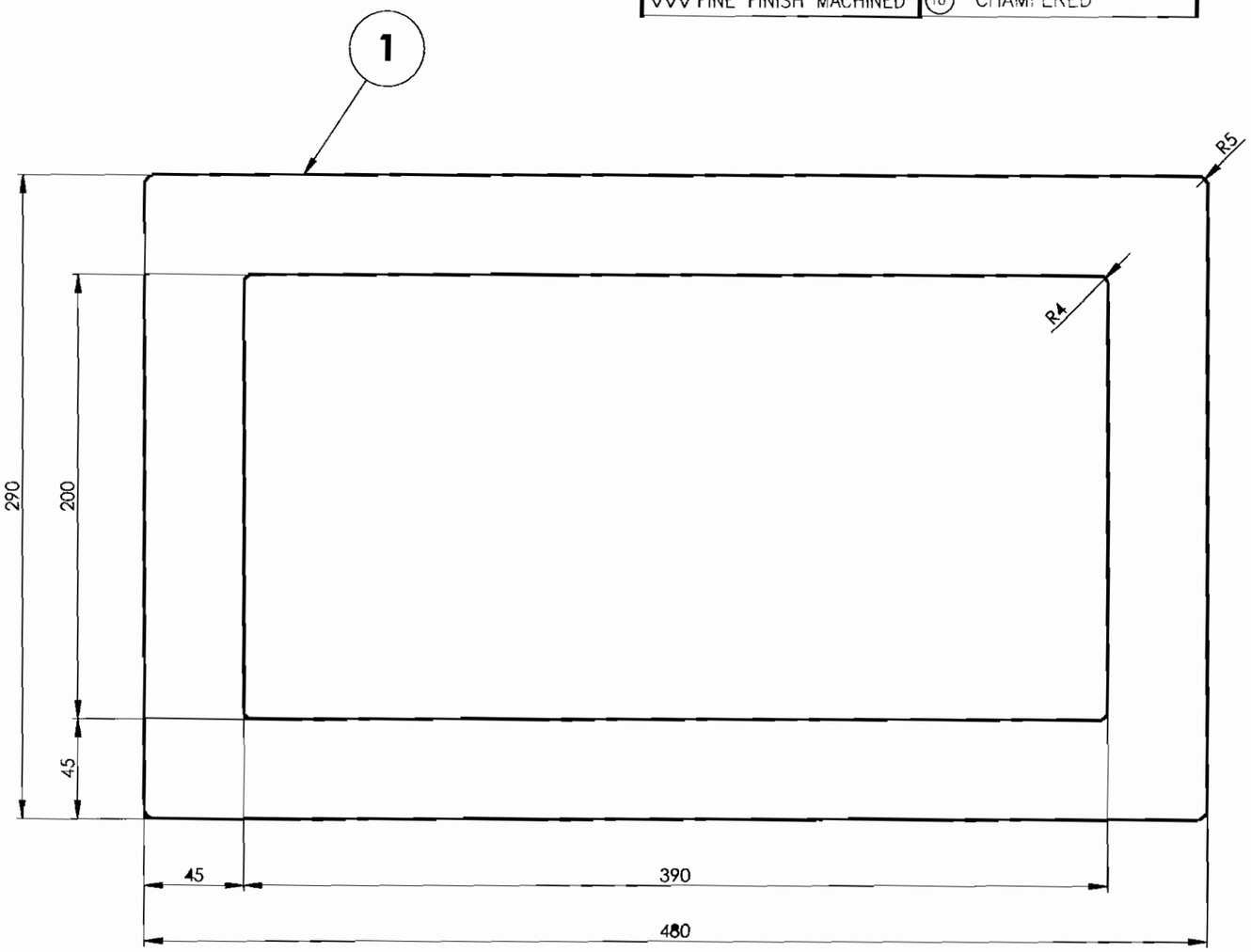

ALL DIMENSIONS ARE IN mm UNLESS OTHERWISE SPECIFIED. FOR UNTOLERANCED DIMENSIONS AND ROUGHNESS VALUES, REFER DRAWING NO ICF/STD-9-0-001.
ANY MANUAL ALTERATION SHALL AUTOMATICALLY RENDER THIS DRAWING INVALID. WELDING SYMBOLS ARE AS PER EN ISO 2553.
WEIGHT GIVEN IN DRAWING IS FOR INDICATIVE PURPOSE ONLY

REF.DRG.NO.-

QTY.	DESCRIPTION	DIMENSIONS	ITEM NO.	REF. DRGS	MATL.SPEC.	WT/UNIT IN KGS	REMARKS
1	BACK PIECE	8x290x480	1		RDSO SPEC C-K201 X5 Cr Ni 18 10	3.92	

GROUP: 1-3 Trough Floor | SURFACE AREA IN Sq.m.: | WT/ASSY IN Kgs:

BACK PIECE

SCALE 1:5	SSE/D	
	CHD	A SURESH
ALT. -	ALTD	
	DRN	D Nagarajan

DATE OF LATEST ALT.	DATE OF FIRST ISSUE	AME/SME
-	01-06-2026	

INDIAN RAILWAY STANDARDS
INTEGRAL COACH FACTORY, CHENNAI - 600038

SHEET 1 OF 1

AAA13501 A3

AAA13506

▽ ROUGH MACHINED	(01) ROUGH CLEANED
▽▽ FINISH MACHINED	(01b) BURRS REMOVED
▽▽▽ FINE FINISH MACHINED	(18) CHAMFERED

REVISIONS			
ALT.	ZONE	DESCRIPTION	APPROVED & DATE

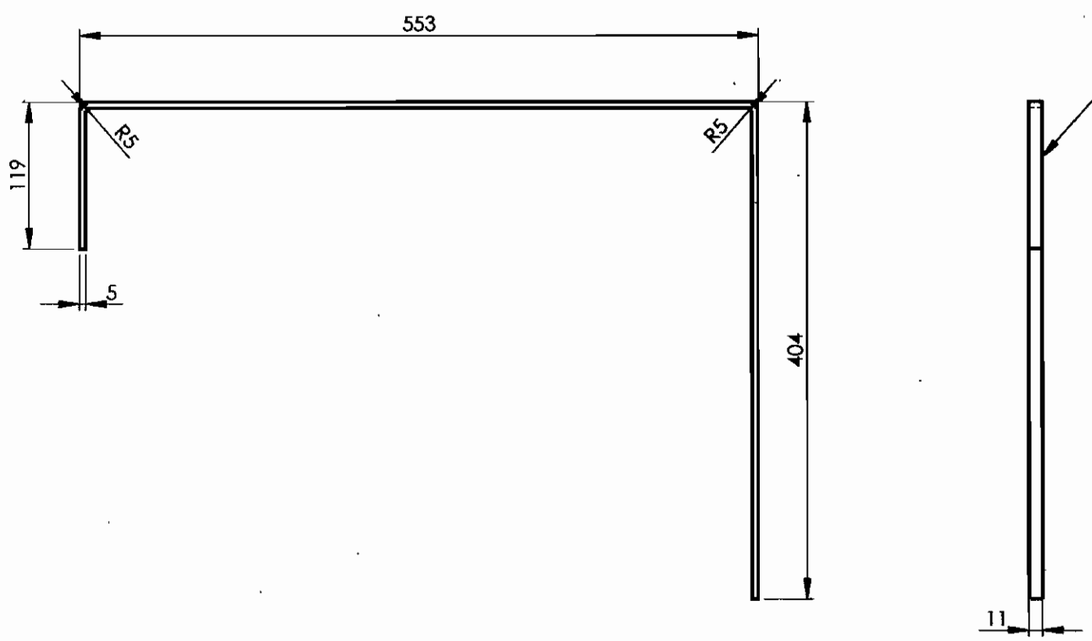

ALL DIMENSIONS ARE IN mm UNLESS OTHERWISE SPECIFIED. FOR UNTOLERANCED DIMENSIONS AND ROUGHNESS VALUES, REFER DRAWING NO ICF/STD-9-0-001.
ANY MANUAL ALTERATION SHALL AUTOMATICALLY RENDER THIS DRAWING INVALID. WELDING SYMBOLS ARE AS PER EN ISO 2553.
WEIGHT GIVEN IN DRAWING IS FOR INDICATIVE PURPOSE ONLY

QTY.	DESCRIPTION	DIMENSIONS	ITEM NO.	REF. DRGS	MATL.SPEC.	WT/UNIT IN KGS	REMARKS
1	STIFFENER	5x11x1060	1		RDSO SPEC C-K201 X5 Cr Ni 18 10	0.47	

GROUP: 1-3 Trough Floor | SURFACE AREA IN Sq.m.: | WT/ASSY IN Kgs:

STIFFENER

SCALE	SSE/D	
1:5	CHD	A SURESH
ALT. -	ALTD	
	DRN	D Nagarajan

INDIAN RAILWAY STANDARDS
INTEGRAL COACH FACTORY, CHENNAI - 600038

SHEET 1 OF 1

AAA13506 | A3

REF.DRG.NO.-

-	01-07-2026	
DATE OF LATEST ALT.	DATE OF FIRST ISSUE	AME/SME

AAA13513

▽ ROUGH MACHINED	(01) ROUGH CLEANED
▽▽ FINISH MACHINED	(01b) BURRS REMOVED
▽▽▽ FINE FINISH MACHINED	(18) CHAMFERED

REVISIONS			
ALT.	ZONE	DESCRIPTION	APPROVED & DATE

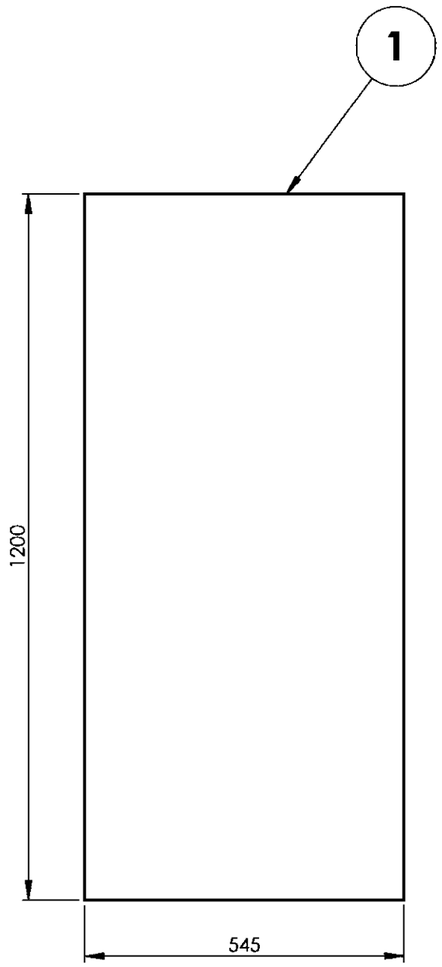

ALL DIMENSIONS ARE IN mm UNLESS OTHERWISE SPECIFIED. FOR UNTOLERANCED DIMENSIONS AND ROUGHNESS VALUES, REFER DRAWING NO ICF/STD-9-0-001.
ANY MANUAL ALTERATION SHALL AUTOMATICALLY RENDER THIS DRAWING INVALID. WELDING SYMBOLS ARE AS PER EN ISO 2553.
WEIGHT GIVEN IN DRAWING IS FOR INDICATIVE PURPOSE ONLY

REF.DRG.NO.-

1	CLOSING SHEET	2x545x1200	1		RDSO/SPEC C-K201 X5 Cr Ni 18 10	10.46	
QTY.	DESCRIPTION	DIMENSIONS	ITEM NO.	REF. DRGS	MATL.SPEC.	WT/UNIT IN KGS	REMARKS

GROUP: 1-1 | SURFACE AREA IN Sq.m.: | WT/ASSY IN Kgs:

CLOSING SHEET

SCALE		
1:10	SSE/D	
	CHD	A SURESH
ALT. -	ALTD	
	DRN	M.SIVAKUMAR

DATE OF LATEST ALT.	DATE OF FIRST ISSUE	AME/SME
	01-07-2026	

INDIAN RAILWAY STANDARDS
INTEGRAL COACH FACTORY, CHENNAI - 600038

SHEET 1 OF 1

AAA13513 A3

AAA13514

▽ ROUGH MACHINED	(01) ROUGH CLEANED
▽▽ FINISH MACHINED	(01b) BURRS REMOVED
▽▽▽ FINE FINISH MACHINED	(18) CHAMFERED

REVISIONS			
ALT.	ZONE	DESCRIPTION	APPROVED & DATE

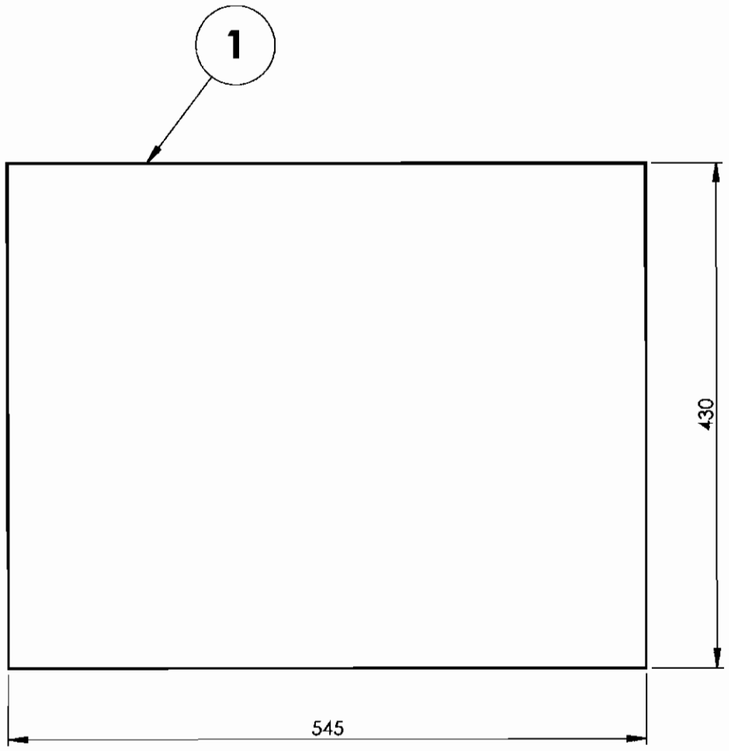

ALL DIMENSIONS ARE IN mm UNLESS OTHERWISE SPECIFIED. FOR UNTOLERANCED DIMENSIONS AND ROUGHNESS VALUES, REFER DRAWING NO ICF/STD-9-0-001.
ANY MANUAL ALTERATION SHALL AUTOMATICALLY RENDER THIS DRAWING INVALID. WELDING SYMBOLS ARE AS PER EN ISO 2553.
WEIGHT GIVEN IN DRAWING IS FOR INDICATIVE PURPOSE ONLY

REF.DRG.NO.-

1	CLOSING SHEET	2x430x545	1		RDSO/SPEC C-K201 X5 Cr Ni 18 10	3.75	
QTY.	DESCRIPTION	DIMENSIONS	ITEM NO.	REF. DRGS	MATL.SPEC.	WT/UNIT IN KGS	REMARKS

GROUP: 1-3 Trough Floor | SURFACE AREA IN Sq.m.: | WT/ASSY IN Kgs:

CLOSING SHEET

SCALE	SSE/D	
1:5	CHD	A SURESH
ALT. -	ALTD	
	DRN	D Nagarajan

INDIAN RAILWAY STANDARDS
INTEGRAL COACH FACTORY, CHENNAI - 600038

SHEET 1 OF 1

AAA13514 A3

-	01-06-2026	
DATE OF LATEST ALT.	DATE OF FIRST ISSUE	AME/SME

AAA13515

∇ ROUGH MACHINED	(01) ROUGH CLEANED
∇∇ FINISH MACHINED	(01b) BURRS REMOVED
∇∇∇ FINE FINISH MACHINED	(18) CHAMFERED

REVISIONS			
ALT.	ZONE	DESCRIPTION	APPROVED & DATE

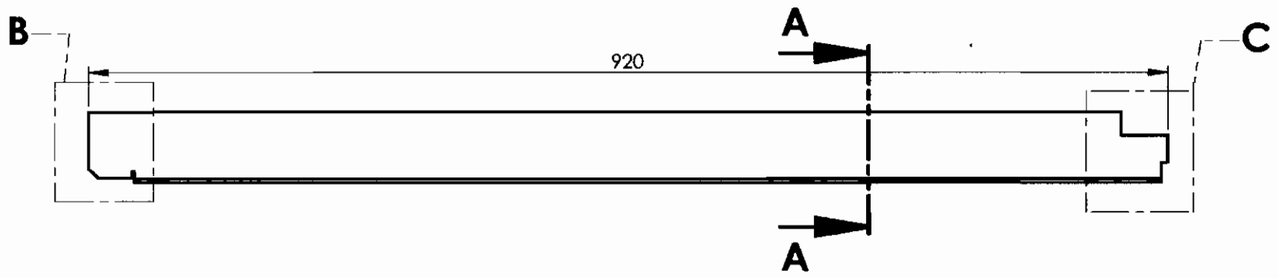

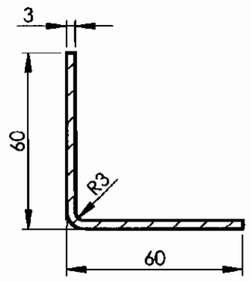

SECTION A-A
SCALE 1 : 2

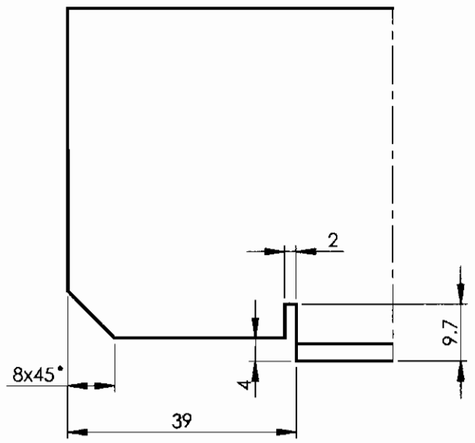

DETAIL B
SCALE 1 : 1

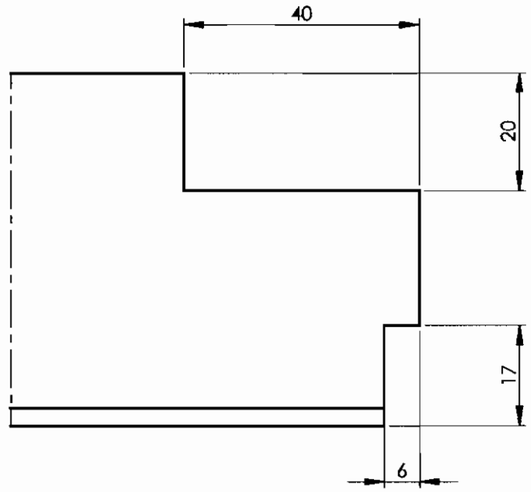

DETAIL C
SCALE 1 : 1

ALL DIMENSIONS ARE IN mm UNLESS OTHERWISE SPECIFIED. FOR UNTOLERANCED DIMENSIONS AND ROUGHNESS VALUES, REFER DRAWING NO ICF/STD-9-0-001.
ANY MANUAL ALTERATION SHALL AUTOMATICALLY RENDER THIS DRAWING INVALID. WELDING SYMBOLS ARE AS PER EN ISO 2553.
WEIGHT GIVEN IN DRAWING IS FOR INDICATIVE PURPOSE ONLY

REF.DRG.NO.-

QTY.	DESCRIPTION	DIMENSIONS	ITEM NO.	REF. DRGS	MATL.SPEC.	WT/UNIT IN KGS	REMARKS
1	ANGLE	3 x 114 x 920	1		RDSO SPEC C-K201 X5 Cr Ni 18 10	2.45	

GROUP: 1-3 Trough Floor | SURFACE AREA IN Sq.m.: | WT/ASSY IN Kgs:

ANGLE

SCALE 1:5	SSE/D	
	CHD	A SURESH
ALT. -	ALTD	
	DRN	D Nagarajan

INDIAN RAILWAY STANDARDS
INTEGRAL COACH FACTORY, CHENNAI - 600038

SHEET 1 OF 1

AAA13515 A3

-	01-07-2026	
DATE OF LATEST ALT.	DATE OF FIRST ISSUE	AME/SME

AAA13516

▽ ROUGH MACHINED	(01) ROUGH CLEANED
▽▽ FINISH MACHINED	(01b) BURRS REMOVED
▽▽▽ FINE FINISH MACHINED	(18) CHAMFERED

REVISIONS			
ALT.	ZONE	DESCRIPTION	APPROVED & DATE

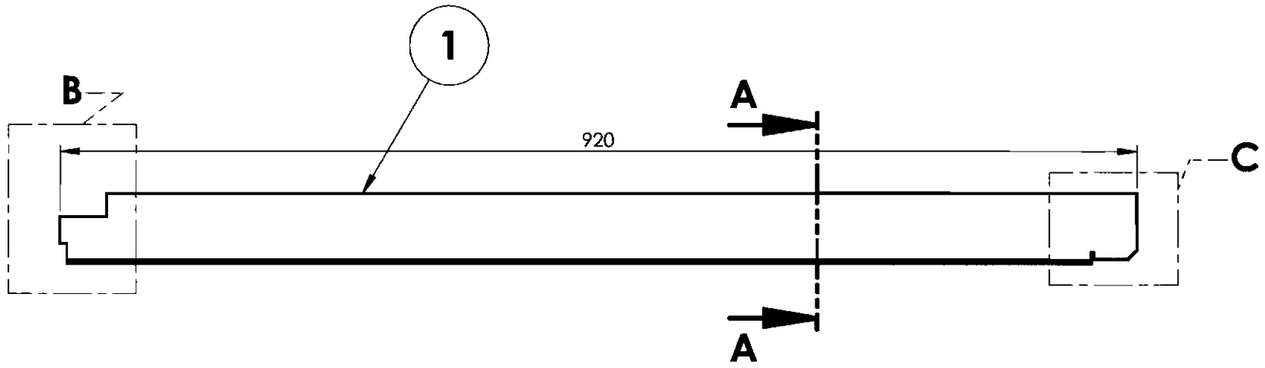

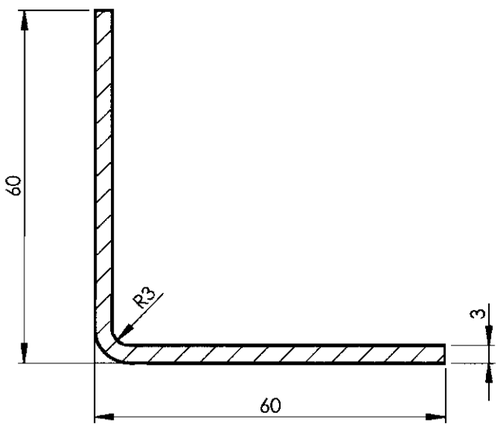

SECTION A-A
SCALE 1 : 1

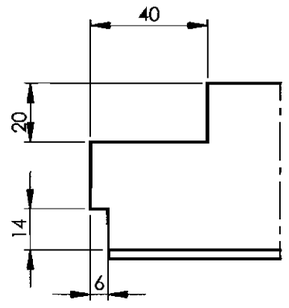

DETAIL B
SCALE 1 : 2

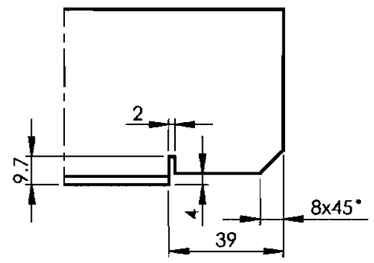

DETAIL C
SCALE 1 : 2

ALL DIMENSIONS ARE IN mm UNLESS OTHERWISE SPECIFIED FOR UNTOLERANCED DIMENSIONS AND ROUGHNESS VALUES, REFER DRAWING NO ICF/STD-9-0-0001.
ANY MANUAL ALTERATION SHALL AUTOMATICALLY RENDER THIS DRAWING INVALID. WELDING SYMBOLS ARE AS PER EN ISO 2553.
WEIGHT GIVEN IN DRAWING IS FOR INDICATIVE PURPOSE ONLY

1	ANGLE	3 X 114 X 920	1		RDSO SPEC C-K201 X5 Cr Ni 18 10	2.45	
QTY.	DESCRIPTION	DIMENSIONS	ITEM NO.	REF. DRGS	MATL.SPEC.	WT/UNIT IN KGS	REMARKS

GROUP: 1-3 Trough Floor | SURFACE AREA IN Sq.m.: | WT/ASSY IN Kgs:

ANGLE

SCALE 1:5	SSE/D	
	CHD	A SURESH
ALT. -	ALTD	
	DRN	D Nagarajan

INDIAN RAILWAY STANDARDS
INTEGRAL COACH FACTORY, CHENNAI - 600038

SHEET 1 OF 1

AAA13516 A3

REF.DRG.NO.

	01-06-2026	
DATE OF LATEST ALT.	DATE OF FIRST ISSUE	AME/SME

AAA13517

▽ ROUGH MACHINED	(01) ROUGH CLEANED
▽▽ FINISH MACHINED	(01b) BURRS REMOVED
▽▽▽ FINE FINISH MACHINED	(18) CHAMFERED

REVISIONS			
ALT.	ZONE	DESCRIPTION	APPROVED & DATE

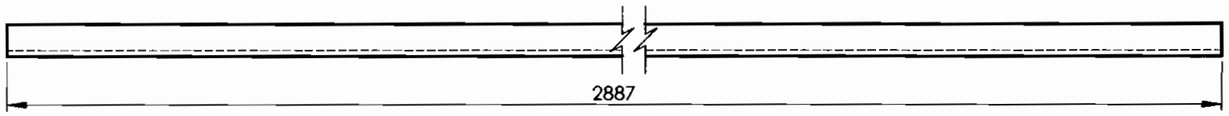

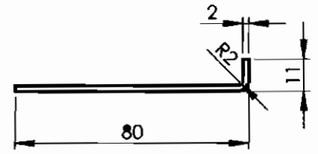

ALL DIMENSIONS ARE IN mm UNLESS OTHERWISE SPECIFIED. FOR UNTOLERANCED DIMENSIONS AND ROUGHNESS VALUES, REFER DRAWING NO ICF/STD-9-0-001.
ANY MANUAL ALTERATION SHALL AUTOMATICALLY RENDER THIS DRAWING INVALID. WELDING SYMBOLS ARE AS PER EN ISO 2553.
WEIGHT GIVEN IN DRAWING IS FOR INDICATIVE PURPOSE ONLY

QTY.	DESCRIPTION	DIMENSIONS	ITEM NO.	REF. DRGS	MATL.SPEC.	WT/UNIT IN KGS	REMARKS
1	ANGLE	2x87x2887	1		RDSO SPEC C-K201 X2 Cr Ni N 18 7	4.05	

GROUP: 1-1 Under Frame | SURFACE AREA IN Sq.m.: | WT/ASSY IN Kgs:

ANGLE

SCALE	SSE/D	
1:20	CHD	A SURESH
ALT. -	ALTD	
	DRN	D Nagarajan

INDIAN RAILWAY STANDARDS
INTEGRAL COACH FACTORY, CHENNAI - 600038

SHEET 1 OF 1

AAA13517 | A3

REF.DRG.NO.-

-	01-07-2026	
DATE OF LATEST ALT.	DATE OF FIRST ISSUE	AME/SME

AAA13518

ROUGH MACHINED	(01) ROUGH CLEANED
FINISH MACHINED	(01b) BURRS REMOVED
FINE FINISH MACHINED	(18) CHAMFERED

REVISIONS			
ALT.	ZONE	DESCRIPTION	APPROVED & DATE

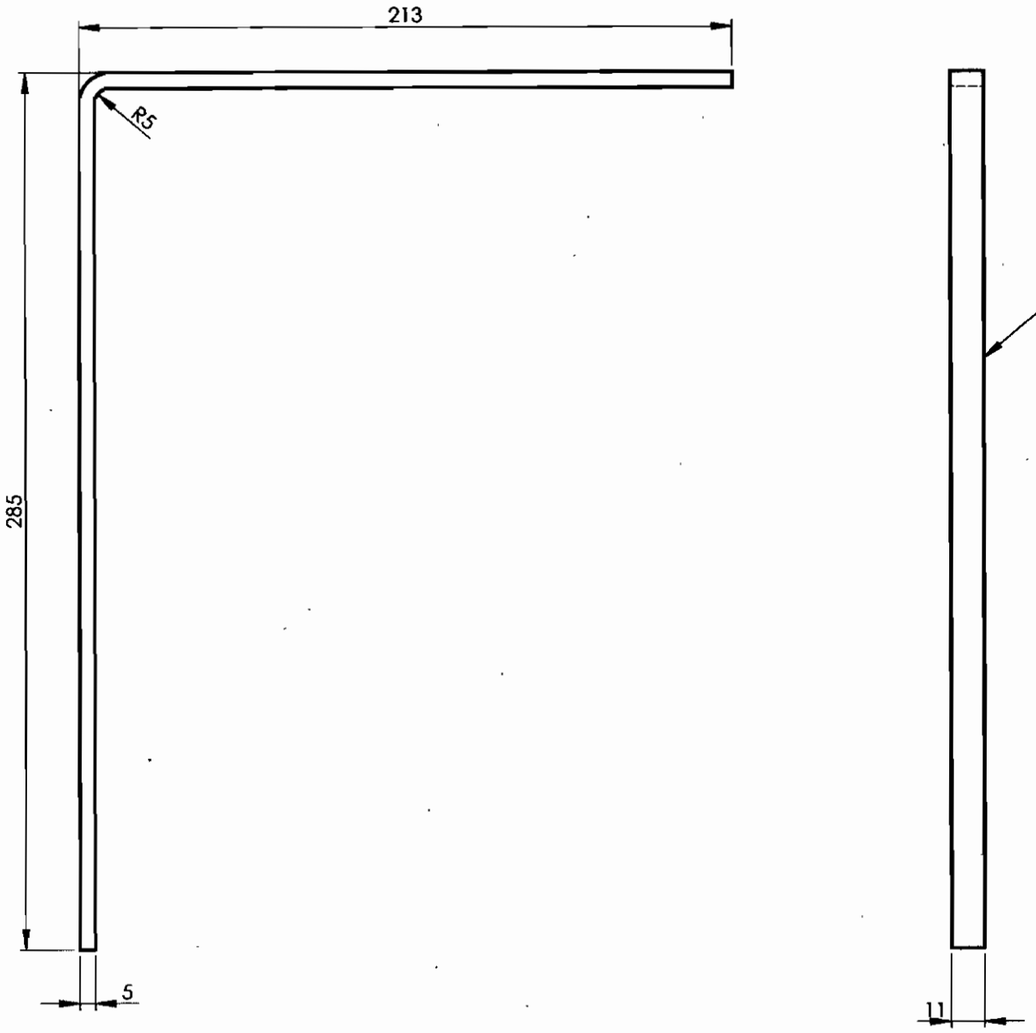

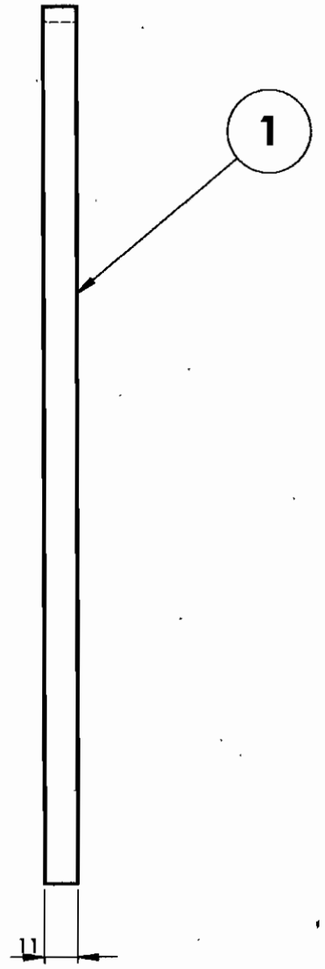

ALL DIMENSIONS ARE IN mm UNLESS OTHERWISE SPECIFIED. FOR UNTOLERANCED DIMENSIONS AND ROUGHNESS VALUES, REFER DRAWING NO ICF/STD-9-0-001.
ANY MANUAL ALTERATION SHALL AUTOMATICALLY RENDER THIS DRAWING INVALID. WELDING SYMBOLS ARE AS PER EN ISO 2553.
WEIGHT GIVEN IN DRAWING IS FOR INDICATIVE PURPOSE ONLY

REF.DRG.NO.-

1	STIFFENER	5x11x490	1		RDSO SPEC C-K201 X5 Cr Ni 18 10	0.22	
QTY.	DESCRIPTION	DIMENSIONS	ITEM NO.	REF. DRGS	MATL.SPEC.	WT/UNIT IN KGS	REMARKS

GROUP: 1-3 Trough Floor | SURFACE AREA IN Sq.m.: | WT/ASSY IN Kgs:

STIFFENER

SCALE	SSE/D	
1:2	CHD	A SURESH
ALT. -	ALTD	
	DRN	D Nagarajan

INDIAN RAILWAY STANDARDS
INTEGRAL COACH FACTORY, CHENNAI - 600038

SHEET 1 OF 1

AAA13518 A3

-	01-07-2026	
DATE OF LATEST ALT.	DATE OF FIRST ISSUE	AME/SME

AAA13520

▽ ROUGH MACHINED	(01) ROUGH CLEANED
▽▽ FINISH MACHINED	(01b) BURRS REMOVED
▽▽▽ FINE FINISH MACHINED	(18) CHAMFERED

REVISIONS			
ALT.	ZONE	DESCRIPTION	APPROVED & DATE

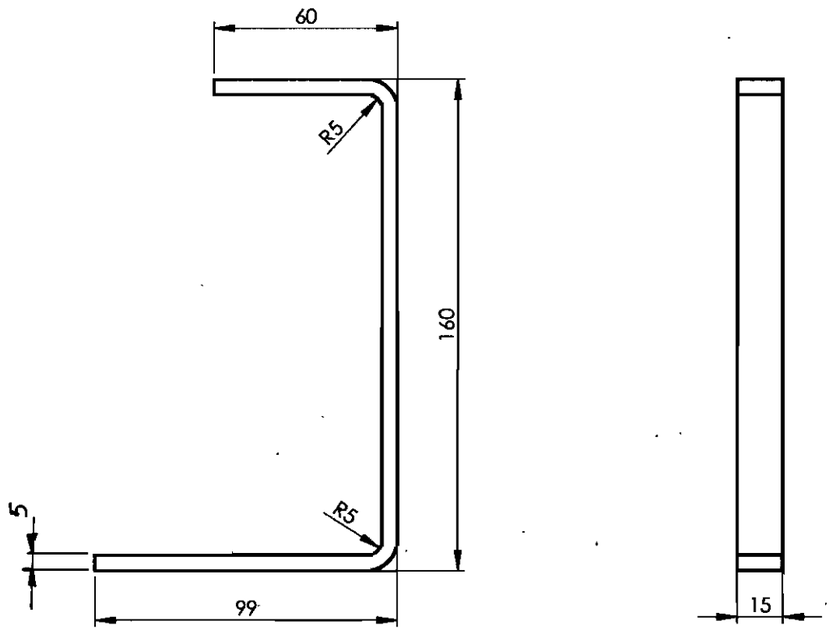

ALL DIMENSIONS ARE IN mm UNLESS OTHERWISE SPECIFIED. FOR UNTOLERANCED DIMENSIONS AND ROUGHNESS VALUES, REFER DRAWING NO ICF/STD-9-0-001.
ANY MANUAL ALTERATION SHALL AUTOMATICALLY RENDER THIS DRAWING INVALID. WELDING SYMBOLS ARE AS PER EN ISO 2553.
WEIGHT GIVEN IN DRAWING IS FOR INDICATIVE PURPOSE ONLY

QTY.	DESCRIPTION	DIMENSIONS	ITEM NO.	REF. DRGS	MATL.SPEC.	WT/UNIT IN KGS	REMARKS
1	STIFFENER	5 x 15 x 301	1		SUS301L-ST	0.18	

GROUP: 1-3 Trough Floor | SURFACE AREA IN Sq.m.: | WT/ASSY IN Kgs:

STIFFENER

SCALE		
1:5	SSE/D	
	CHD	A SURESH
ALT.	ALTD	
	DRN	D Nagarajan

INDIAN RAILWAY STANDARDS
INTEGRAL COACH FACTORY, CHENNAI - 600038

SHEET 1 OF 1

AAA13520 | A3

DATE OF LATEST ALT.	DATE OF FIRST ISSUE	AME/SME
	01-07-2026	

REF.DRG.NO.

AAA13523

▽ ROUGH MACHINED	(01) ROUGH CLEANED
▽▽ FINISH MACHINED	(01b) BURRS REMOVED
▽▽▽ FINE FINISH MACHINED	(18) CHAMFERED

REVISIONS			
ALT.	ZONE	DESCRIPTION	APPROVED & DATE

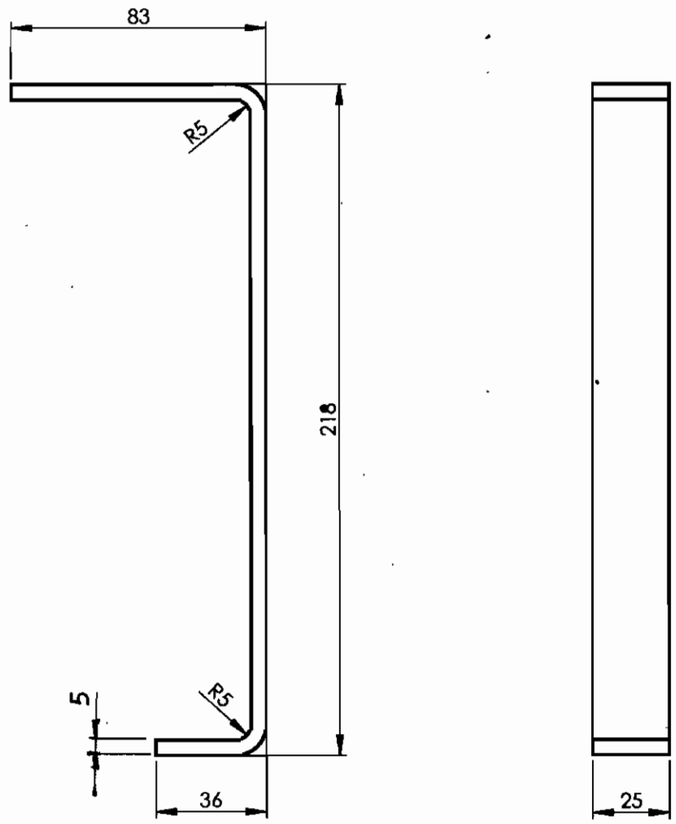

ALL DIMENSIONS ARE IN mm UNLESS OTHERWISE SPECIFIED. FOR UNTOLERANCED DIMENSIONS AND ROUGHNESS VALUES, REFER DRAWING NO ICF/STD-*-0-001.
ANY MANUAL ALTERATION SHALL AUTOMATICALLY RENDER THIS DRAWING INVALID. WELDING SYMBOLS ARE AS PER EN ISO 2553.
WEIGHT GIVEN IN DRAWING IS FOR INDICATIVE PURPOSE ONLY

QTY.	DESCRIPTION	DIMENSIONS	ITEM NO.	REF. DRGS	MATL.SPEC.	WT/UNIT IN KGS	REMARKS
1	STIFFENER	5x25x321	1		RDSO SPEC C-K201 X5 Cr Ni 18 10	0.32	

GROUP: 1-3 Trough Floor | SURFACE AREA IN Sq.m.: | WT/ASSY IN Kgs:

STIFFENER

SCALE	SSE/D	
1:5	CHD	A SURESH
ALT. -	ALTD	
	DRN	D Nagarajan

INDIAN RAILWAY STANDARDS
INTEGRAL COACH FACTORY, CHENNAI - 600038

SHEET 1 OF 1

AAA13523 A3

-	01-07-2026	AME/SME
DATE OF LATEST ALT.	DATE OF FIRST ISSUE	

REF.DRG.NO.-

AAA13524

▽ ROUGH MACHINED	(01) ROUGH CLEANED
▽▽ FINISH MACHINED	(01b) BURRS REMOVED
▽▽▽ FINE FINISH MACHINED.	(18) CHAMFERED

REVISIONS			
ALT.	ZONE	DESCRIPTION	APPROVED & DATE

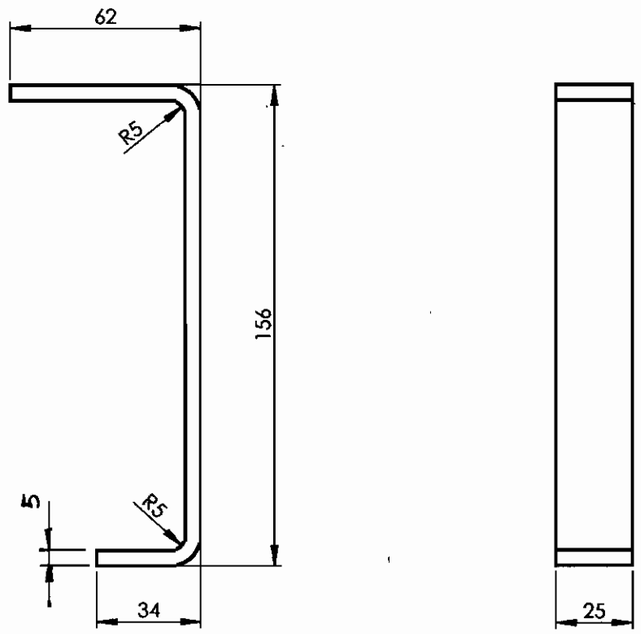

ALL DIMENSIONS ARE IN mm UNLESS OTHERWISE SPECIFIED. FOR UNTOLERANCED DIMENSIONS AND ROUGHNESS VALUES, REFER DRAWING NO ICF/STD-9-0-001.
ANY MANUAL ALTERATION SHALL AUTOMATICALLY RENDER THIS DRAWING INVALID. WELDING SYMBOLS ARE AS PER EN ISO 2553.
WEIGHT GIVEN IN DRAWING IS FOR INDICATIVE PURPOSE ONLY

REF.DRG.NO.-

QTY.	DESCRIPTION	DIMENSIONS	ITEM NO.	REF. DRGS	MATL.SPEC.	WT/UNIT IN KGS	REMARKS
1	STIFFENER	5x25x236	1		RDSO SPEC C-K201 X5 Cr Ni 18 10	0.24	

GROUP: 1-3 Trough Floor | SURFACE AREA IN Sq.m.: | WT/ASSY IN Kgs:

STIFFENER

SCALE 1:2	SSE/D	
	CHD	A SURESH
ALT. -	ALTD	
	DRN	D Nagarajan

INDIAN RAILWAY STANDARDS
INTEGRAL COACH FACTORY, CHENNAI - 600038

SHEET 1 OF 1

AAA13524 | A3

DATE OF LATEST ALT.	DATE OF FIRST ISSUE	AME/SME
-	01-07-2026	

AAA13525

▽ ROUGH MACHINED	(01) ROUGH CLEANED
▽▽ FINISH MACHINED	(01b) BURRS REMOVED
▽▽▽ FINE FINISH MACHINED	(18) CHAMFERED

REVISIONS			
ALT.	ZONE	DESCRIPTION	APPROVED & DATE

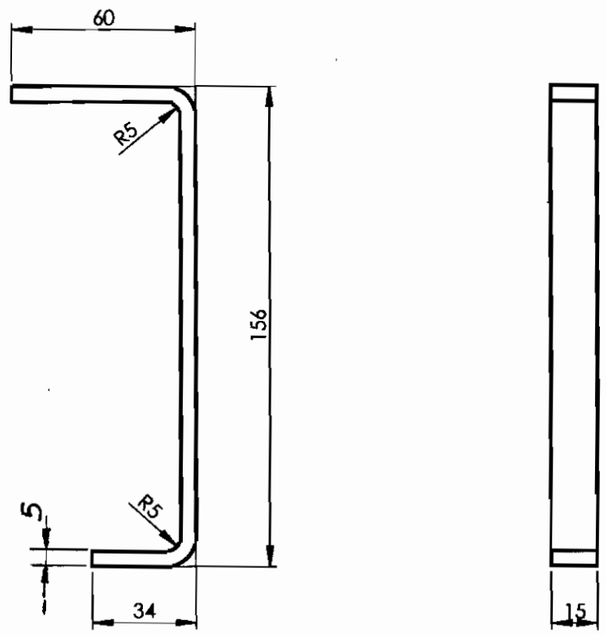

ALL DIMENSIONS ARE IN mm UNLESS OTHERWISE SPECIFIED. FOR UNTOLERANCED DIMENSIONS AND ROUGHNESS VALUES, REFER DRAWING NO ICF/STD-9-0-001.
ANY MANUAL ALTERATION SHALL AUTOMATICALLY RENDER THIS DRAWING INVALID. WELDING SYMBOLS ARE AS PER EN ISO 2553.
WEIGHT GIVEN IN DRAWING IS FOR INDICATIVE PURPOSE ONLY

REF.DRG.NO.-

1	STIFFENER	5x15x234	1		RDSO SPEC C-K201 X5 Cr Ni 18 10	0.14	
QTY.	DESCRIPTION	DIMENSIONS	ITEM NO.	REF. DRGS	MATL.SPEC.	WT/UNIT IN KGS	REMARKS

GROUP: 1-3 Trough Floor | SURFACE AREA IN Sq.m.: | WT/ASSY IN Kgs:

STIFFENER

SCALE 1:2	SSE/D	
	CHD	A SURESH
ALT. -	ALTD	
	DRN	D Nagarajan

INDIAN RAILWAY STANDARDS
INTEGRAL COACH FACTORY, CHENNAI - 600038

SHEET 1 OF 1

AAA13525 A3

-	01-07-2026	
DATE OF LATEST ALT.	DATE OF FIRST ISSUE	AME/SME

AAA13526

▽ ROUGH MACHINED	(01) ROUGH CLEANED
▽▽ FINISH MACHINED	(01b) BURRS REMOVED
▽▽▽ FINE FINISH MACHINED	(18) CHAMFERED

REVISIONS			
ALT.	ZONE	DESCRIPTION	APPROVED & DATE

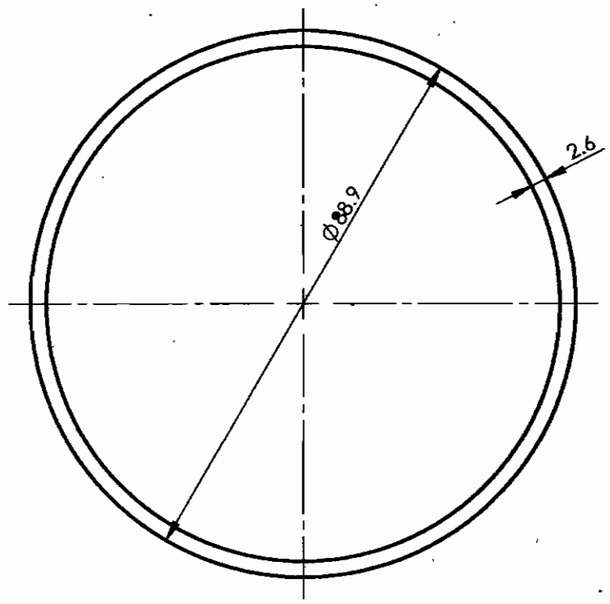

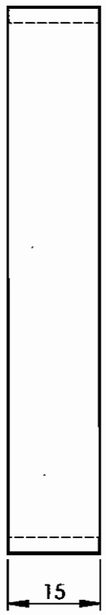

ALL DIMENSIONS ARE IN mm UNLESS OTHERWISE SPECIFIED. FOR UNTOLERANCED DIMENSIONS AND ROUGHNESS VALUES, REFER DRAWING NO ICF/STD-9-0-001.
ANY MANUAL ALTERATION SHALL AUTOMATICALLY RENDER THIS DRAWING INVALID. WELDING SYMBOLS ARE AS PER EN ISO 2553.
WEIGHT GIVEN IN DRAWING IS FOR INDICATIVE PURPOSE ONLY

QTY	DESCRIPTION	DIMENSIONS	ITEM NO.	REF. DRGS	MATL.SPEC.	WT/UNIT IN KGS	REMARKS
1	STIFFENER	OD 88.9x15	1		IS:17876 X04Cr19Ni9	0.08	Thickness=2.6

GROUP: 1-3 Trough Floor | SURFACE AREA IN Sq.m.: | WT/ASSY IN Kgs:

STIFFENER

SCALE		
1:1	SSE/D	
	CHD	A SURESH
ALT. -	ALTD	
	DRN	D Nagarajan

INDIAN RAILWAY STANDARDS
INTEGRAL COACH FACTORY, CHENNAI - 600038

SHEET 1 OF 1

AAA13526 | A3

DATE OF LATEST ALT.	DATE OF FIRST ISSUE	AME/SME
-	01-07-2026	

REF.DRG.NO.-

AAA13534

▽ ROUGH MACHINED	(01) ROUGH CLEANED
▽▽ FINISH MACHINED	(01b) BURRS REMOVED
▽▽▽ FINE FINISH MACHINED	(18) CHAMFERED

REVISIONS			
ALT.	ZONE	DESCRIPTION	APPROVED & DATE

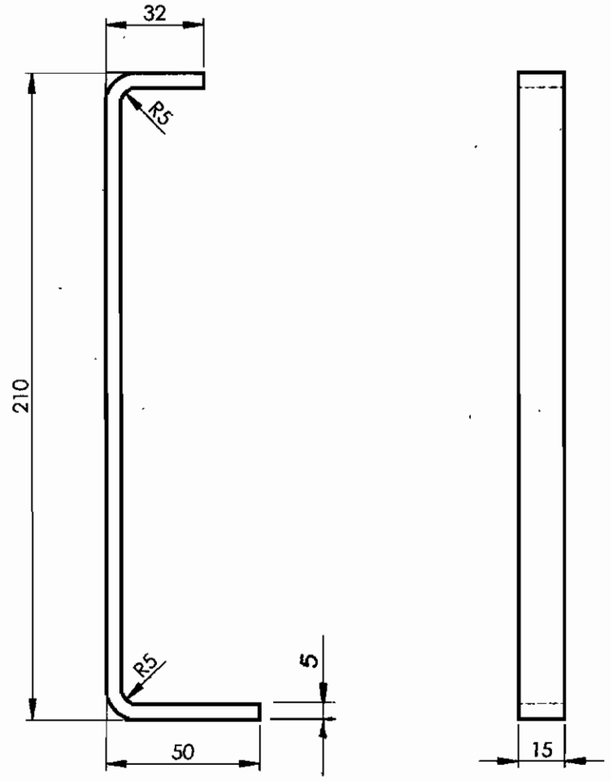

ALL DIMENSIONS ARE IN mm UNLESS OTHERWISE SPECIFIED. FOR UNTOLERANCED DIMENSIONS AND ROUGHNESS VALUES, REFER DRAWING NO ICF/STD-9-0-001.
ANY MANUAL ALTERATION SHALL AUTOMATICALLY RENDER THIS DRAWING INVALID. WELDING SYMBOLS ARE AS PER EN ISO 2553.
WEIGHT GIVEN IN DRAWING IS FOR INDICATIVE PURPOSE ONLY

QTY.	DESCRIPTION	DIMENSIONS	ITEM NO.	REF. DRGS	MATL SPEC.	WT/UNIT IN KGS	REMARKS
1	STIFFENER	5 x 15 x 274	1		SUS301L-ST	0.16	

GROUP: 1-3 Trough Floor | SURFACE AREA IN Sq.m.: | WT/ASSY IN Kgs:

STIFFENER

SCALE		
1:2	SSE/D	
	CHD	A SURESH
ALT. -	ALTD	
	DRN	D Nagarajan

INDIAN RAILWAY STANDARDS
INTEGRAL COACH FACTORY, CHENNAI - 600038

SHEET 1 OF 1

AAA13534 | A3

DATE OF LATEST ALT.	DATE OF FIRST ISSUE	AME/SME
	01-07-2026	

REF.DRG.NO.

AAA13543

▽ ROUGH MACHINED	(01) ROUGH CLEANED
▽▽ FINISH MACHINED	(01b) BURRS REMOVED
▽▽▽ FINE FINISH MACHINED	(18) CHAMFERED

REVISIONS			
ALT.	ZONE	DESCRIPTION	APPROVED & DATE

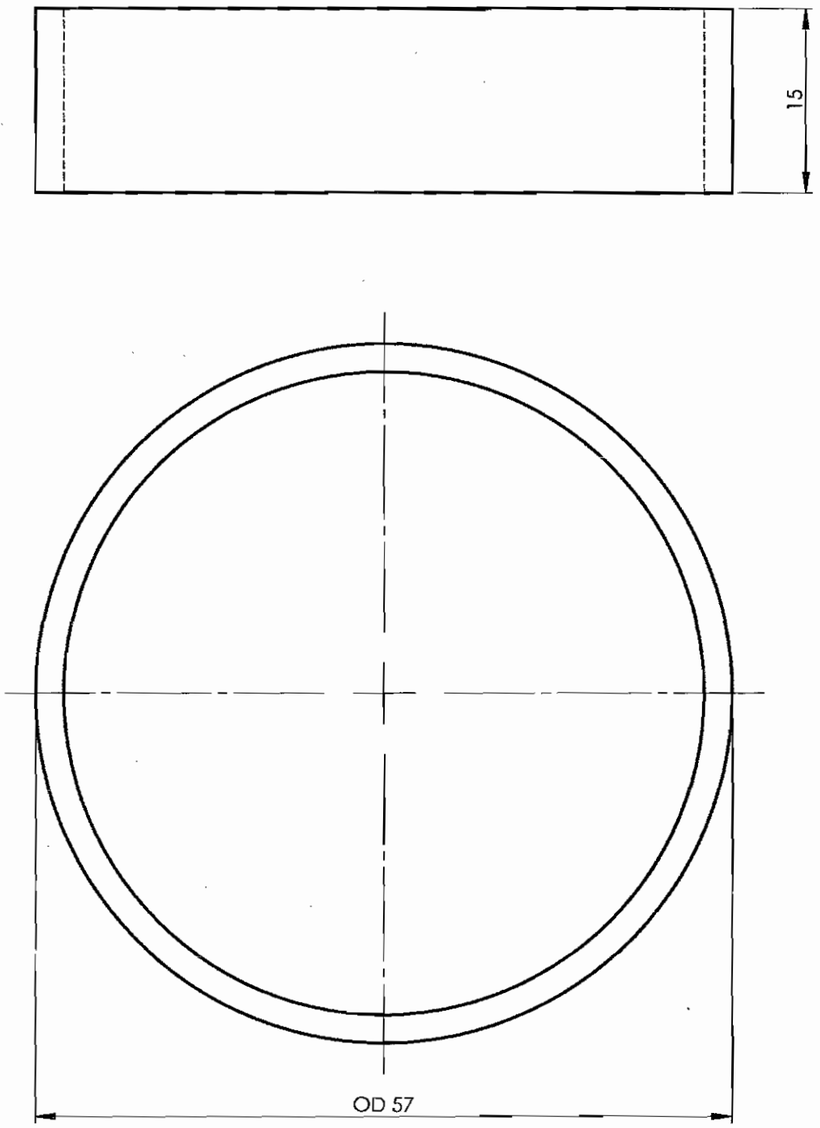

ALL DIMENSIONS ARE IN mm UNLESS OTHERWISE SPECIFIED. FOR UNTOLERANCED DIMENSIONS AND ROUGHNESS VALUES, REFER DRAWING NO ICF/STD-9-0-001.
ANY MANUAL ALTERATION SHALL AUTOMATICALLY RENDER THIS DRAWING INVALID. WELDING SYMBOLS ARE AS PER EN ISO 2553.
WEIGHT GIVEN IN DRAWING IS FOR INDICATIVE PURPOSE ONLY

REF.DRG.NO.-

QTY.	DESCRIPTION	DIMENSIONS	ITEM NO.	REF. DRGS	MATL.SPEC.	WT/UNIT IN KGS	REMARKS
1	STIFFENER	OD 57x2.3x15	1		IS 6913 Gr.-B	0.05	

GROUP: 1-3 Trough Floor | SURFACE AREA IN Sq.m.: | WT/ASSY IN Kgs:

STIFFENER

SCALE 2:1	SSE/D	
	CHD	A SURESH
ALT. -	ALTD	
	DRN	D Nagarajan

INDIAN RAILWAY STANDARDS
INTEGRAL COACH FACTORY, CHENNAI - 600038

SHEET 1 OF 1

AAA13543 A3

-	17-08-2026	
DATE OF LATEST ALT.	DATE OF FIRST ISSUE	AME/SME

AAA13544

▽ ROUGH MACHINED	(01) ROUGH CLEANED
▽▽ FINISH MACHINED	(01b) BURRS REMOVED
▽▽▽ FINE FINISH MACHINED	(18) CHAMFERED

REVISIONS			
ALT.	ZONE	DESCRIPTION	APPROVED & DATE

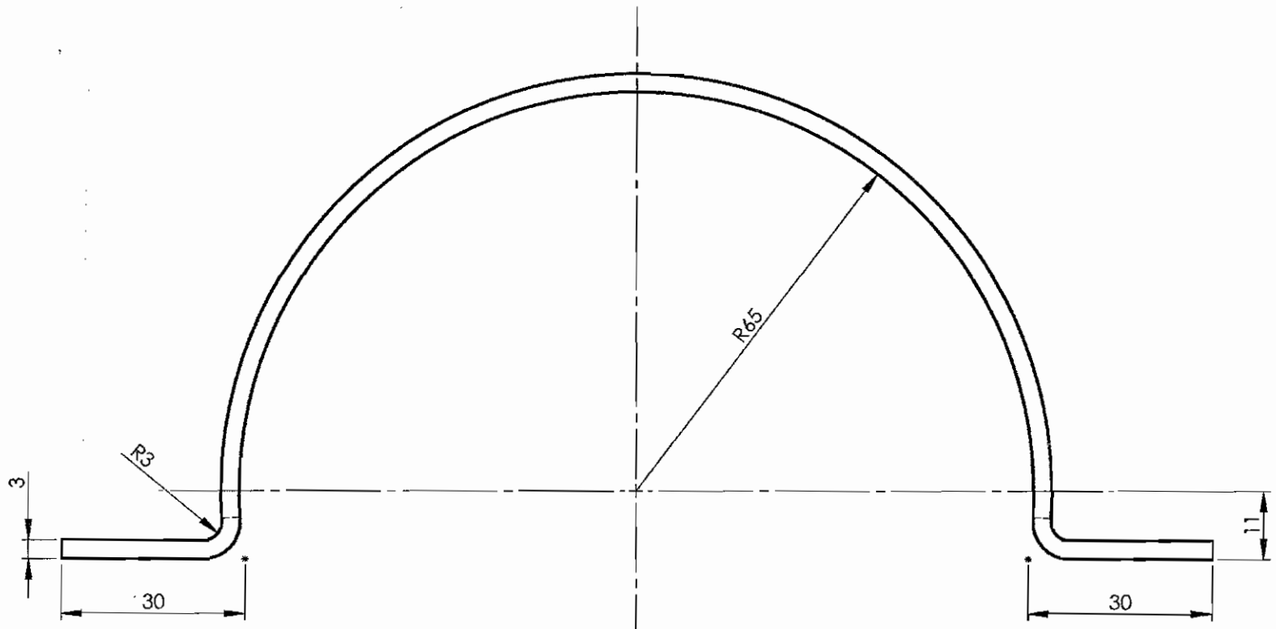

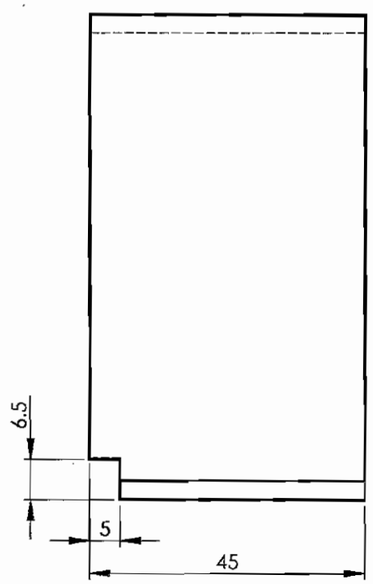

ALL DIMENSIONS ARE IN mm UNLESS OTHERWISE SPECIFIED. FOR UNTOLERANCED DIMENSIONS AND ROUGHNESS VALUES, REFER DRAWING NO ICF/STD-9-0-001.
ANY MANUAL ALTERATION SHALL AUTOMATICALLY RENDER THIS DRAWING INVALID. WELDING SYMBOLS ARE AS PER EN ISO 2553.
WEIGHT GIVEN IN DRAWING IS FOR INDICATIVE PURPOSE ONLY

QTY.	DESCRIPTION	DIMENSIONS	ITEM NO.	REF. DRGS	MATL.SPEC.	WT/UNIT IN KGS	REMARKS
1	ARC STIFFENER	3 x 45 x 278	1		SUS301L-ST	0.29	

GROUP: 1-3 Trough Floor | SURFACE AREA IN Sq.m.: | WT/ASSY IN Kgs:

ARC STIFFENER

SCALE	SSE/D	
1:2	CHD	A SURESH
ALT. -	ALTD	
	DRN	D Nagarajan

INDIAN RAILWAY STANDARDS
INTEGRAL COACH FACTORY, CHENNAI - 600038

SHEET 1 OF 1

AAA13544 | A3

DATE OF LATEST ALT.	DATE OF FIRST ISSUE	AME/SME
	17-08-2026	

REF.DRG.NO.

AAA13545

▽ ROUGH MACHINED	(01) ROUGH CLEANED
▽▽ FINISH MACHINED	(01b) BURRS REMOVED
▽▽▽ FINE FINISH MACHINED	(18) CHAMFERED

REVISIONS			
ALT.	ZONE	DESCRIPTION	APPROVED & DATE

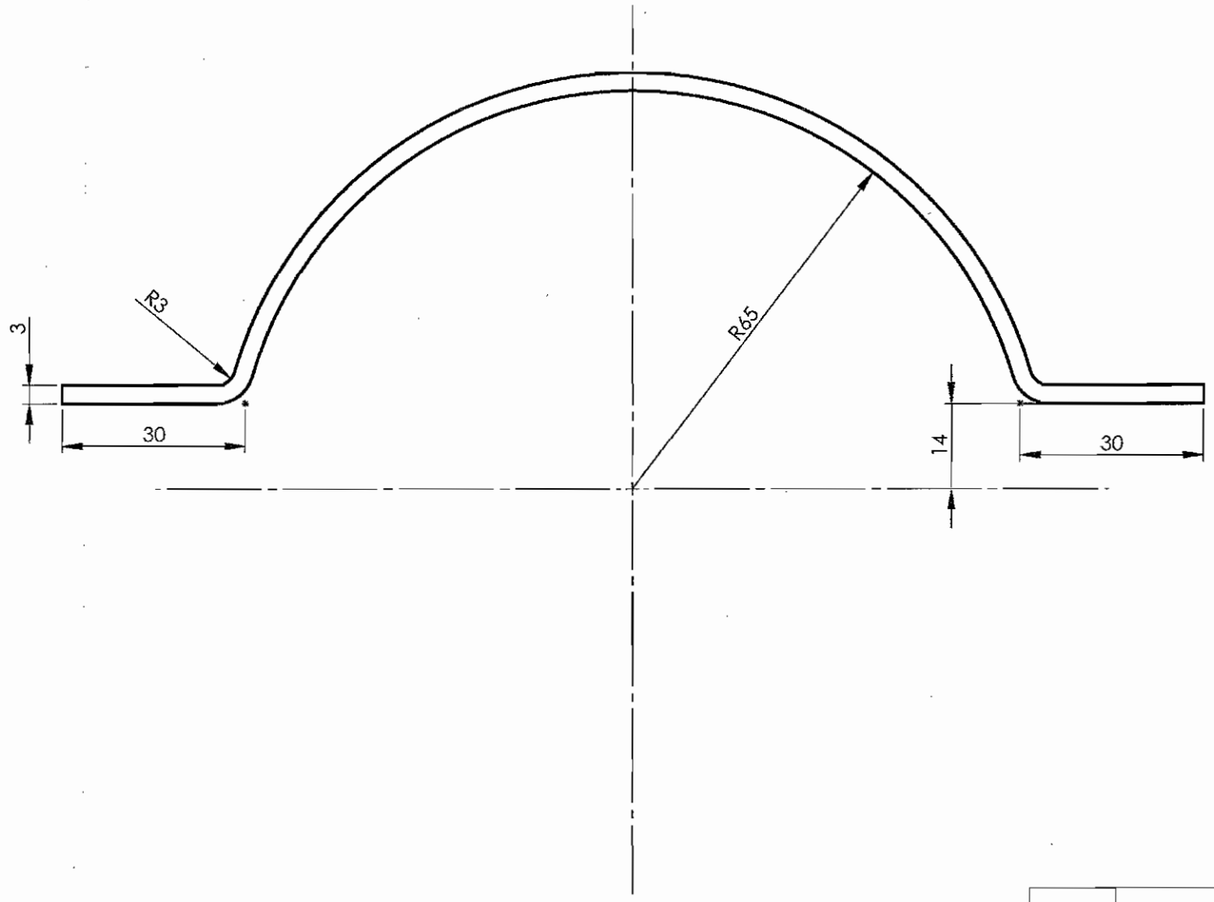

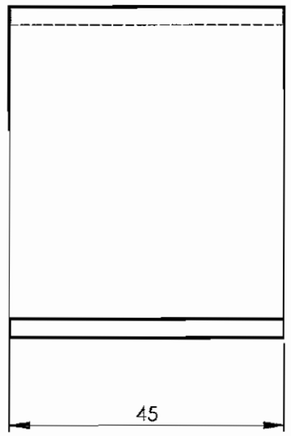

ALL DIMENSIONS ARE IN mm UNLESS OTHERWISE SPECIFIED. FOR UNTOLERANCED DIMENSIONS AND ROUGHNESS VALUES, REFER DRAWING NO ICF/STD-9-0-001.
ANY MANUAL ALTERATION SHALL AUTOMATICALLY RENDER THIS DRAWING INVALID. WELDING SYMBOLS ARE AS PER EN ISO 2553.
WEIGHT GIVEN IN DRAWING IS FOR INDICATIVE PURPOSE ONLY

QTY.	DESCRIPTION	DIMENSIONS	ITEM NO.	REF. DRGS	MATL.SPEC.	WT/UNIT IN KGS	REMARKS
1	ARC STIFFENER	3 x 45 x 232	1		SUS301L-ST	0.25	

GROUP: 1-3 Trough Floor | SURFACE AREA IN Sq.m.: | WT/ASSY IN Kgs:

ARC STIFFENER

SCALE	SSE/D	
1:2	CHD	A SURESH
ALT. -	ALTD	
	DRN	D Nagarajan

INDIAN RAILWAY STANDARDS
INTEGRAL COACH FACTORY, CHENNAI - 600038

SHEET 1 OF 1

AAA13545 | A3

REF.DRG.NO.	DATE OF LATEST ALT.	DATE OF FIRST ISSUE	AME/SME
		17-08-2026	

AAA51072

▽ ROUGH MACHINED	(01) ROUGH CLEANED
▽▽ FINISH MACHINED	(01b) BURRS REMOVED
▽▽▽ FINE FINISH MACHINED	(18) CHAMFERED

REVISIONS

ALT.	ZONE	DESCRIPTION	APPROVED & DATE
a		NAME PLATE REVISED.	-sd-
b		DESIGN REVISED.	-sd-
c		BATCH & SERIAL NO. ADDED	-sd-
d		NOTE-2 ADDED.	

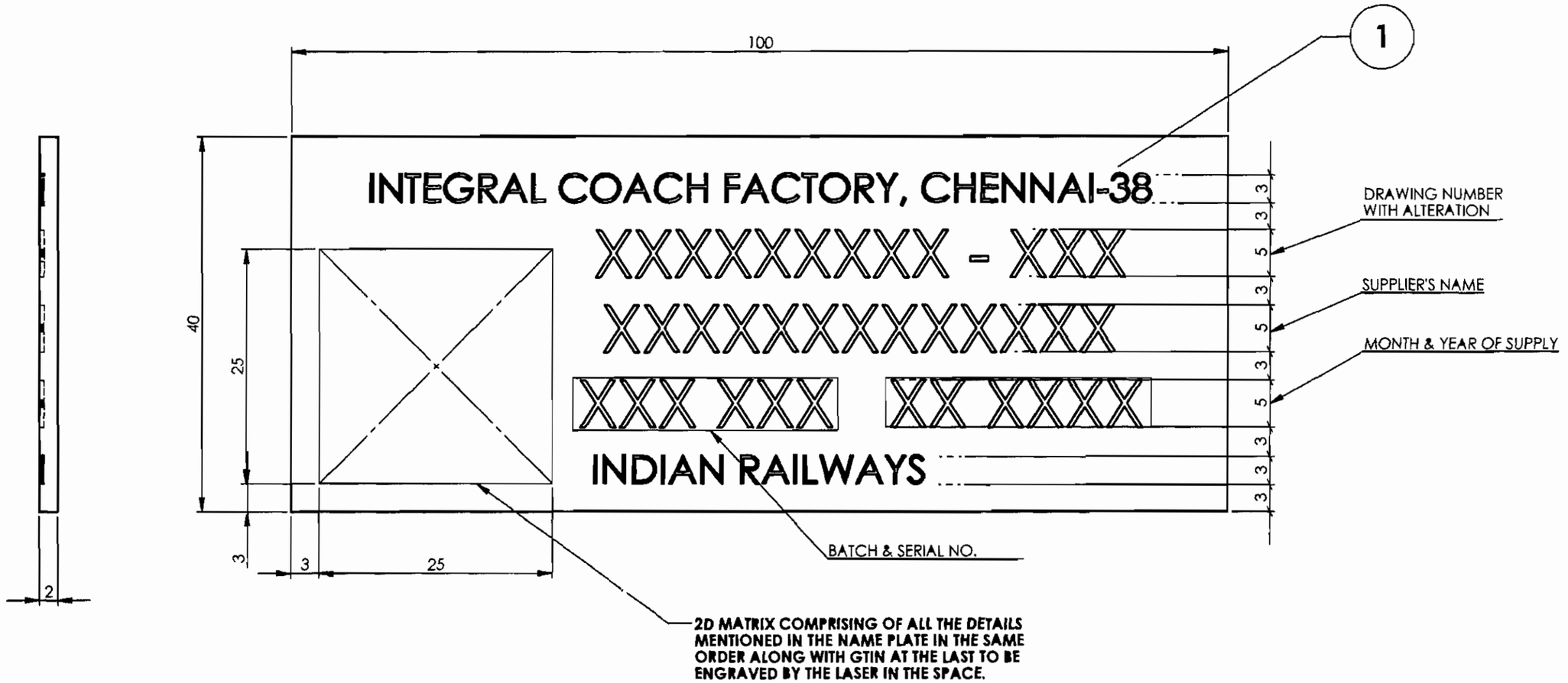

NOTE:

1. LETTERS TO BE PUNCHED OR ENGRAVED.

$ 2. ALTERNATIVELY **AISI-304/SS-304 (X02Cr19Ni10)/IS:6911(X04Cr19Ni9)** ALSO ACCEPTABLE.

QTY	DESCRIPTION	DIMENSIONS	ITEM NO	REF. DRGS	MATL.SPEC.	WT/UNIT IN KGS	REMARKS
1	NAME PLATE FOR SUPPLIER IDENTIFICATION	2x40x100	1		RDSO/SPEC C-K201 X2 Cr Ni 12	0.063	$

GROUP: 5-1 Body Side Doors | SURFACE AREA IN Sq.m.:0.009 | WT/ASSY IN Kgs:

NAME PLATE FOR SUPPLIER IDENTIFICATION

SCALE 2:1	SSE/D	
	CHD	
ALT. d	ALTD	KUNTI THAKUR
	DRN	G. NAGESWARAN

INDIAN RAILWAY STANDARDS
INTEGRAL COACH FACTORY, CHENNAI - 600038

SHEET 1 OF 1

AAA51072 A3

REF.DRG.NO.	DATE OF LATEST ALT.	DATE OF FIRST ISSUE	AME/SME
	06-07-2024	02.06.2010	

ALL DIMS ARE IN mm UNLESS OTHERWISE SPECIFIED. FOR UNTOLERANCED DIMENSIONS AND ROUGHNESS VALUES, REFER DRAWING NO ICF/STD-9-0-001.
ANY MANUAL ALTERATION SHALL AUTOMATICALLY RENDER THIS DRAWING INVALID. WELDING SYMBOLS ARE AS PER IS: 813-1986.
WEIGHT GIVEN IN DRAWING IS FOR INDICATIVE PURPOSE ONLY

AAB12088

▽ ROUGH MACHINED	(0) ROUGH CLEANED
▽▽ FINISH MACHINED	(0.5) BURRS REMOVED
▽▽▽ FINE FINISH MACHINED	(5) CHAMFERED

REVISIONS		
ALT.	DESCRIPTION	APPROVED & DATE

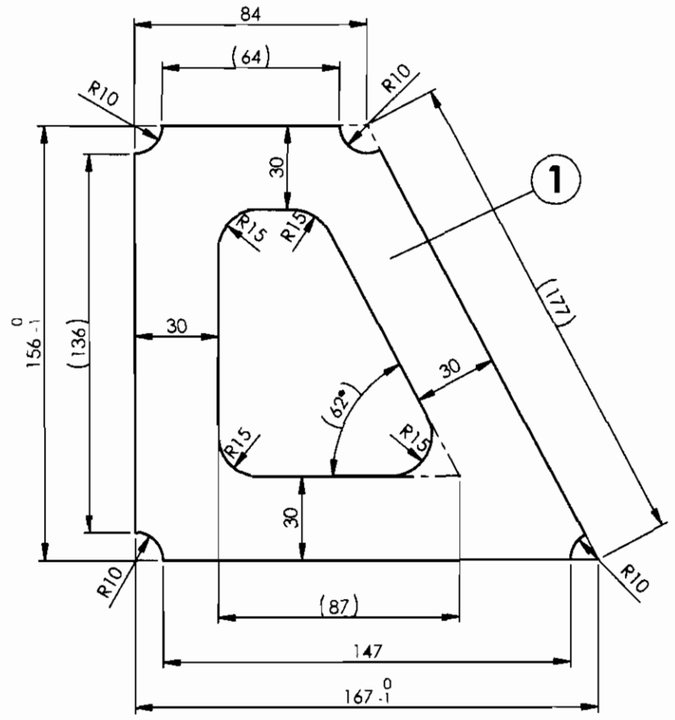

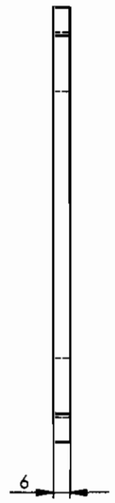

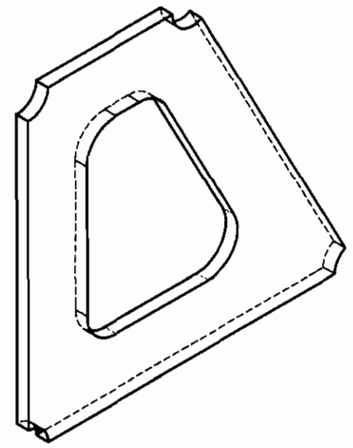

ISOMETRIC VIEW

ALL DIMENSIONS ARE IN mm UNLESS OTHERWISE SPECIFIED FOR UNTOLERANCED DIMENSIONS AND ROUGHNESS VALUES, REFER DRAWING NO ICF/STD-9-0-001.
ANY MANUAL ALTERATION SHALL AUTOMATICALLY RENDER THIS DRAWING INVALID. WELDING SYMBOLS ARE AS PER IS: 813-1986.
WEIGHT GIVEN IN DRAWING IS FOR INDICATIVE PURPOSE ONLY

QTY	DESCRIPTION	DIMENSIONS	ITEM NO.	REF. DRGS	MATL.SPEC.	WT/UNIT IN KGS	REMARKS
1	BRACKET	6 X 156 X 167	1		IRS M-41-1997	0.64	

GROUP: 1-2 Head Stock | SURFACE AREA IN Sq.m.: | WT/ASSY IN Kgs:

BRACKET

SCALE 1:2 | SSE/D | CHD | ALT. | ALTD | DRN: S MUTHUKUMARAN

INDIAN RAILWAY STANDARDS
INTEGRAL COACH FACTORY, CHENNAI - 600038

SHEET 1 OF 1

AAB12088 | A3

REF.DRG.NO.-

DATE OF LATEST ALT.	DATE OF FIRST ISSUE	AME/SME
	05-09-2023	

AAB12096

▽ ROUGH MACHINED	(01) ROUGH CLEANED		
▽▽ FINISH MACHINED	(01b) BURRS REMOVED		
▽▽▽ FINE FINISH MACHINED	(18) CHAMFERED		

REVISIONS			
ALT.	ZONE	DESCRIPTION	APPROVED & DATE

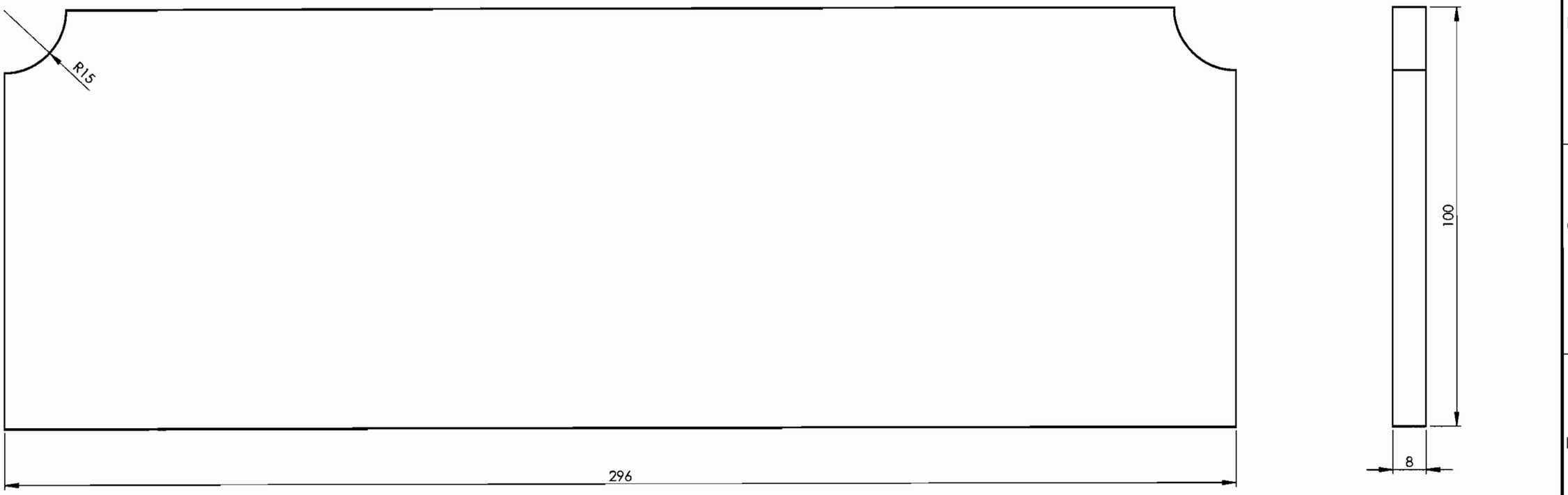

ALL DIMENSIONS ARE IN mm UNLESS OTHERWISE SPECIFIED. FOR UNTOLERANCED DIMENSIONS AND ROUGHNESS VALUES, REFER DRAWING NO ICF/STD-9-0-001.
ANY MANUAL ALTERATION SHALL AUTOMATICALLY RENDER THIS DRAWING INVALID. WELDING SYMBOLS ARE AS PER EN ISO 2553.
WEIGHT GIVEN IN DRAWING IS FOR INDICATIVE PURPOSE ONLY

NOTE:

1. ALL EDGE PREPARATION SHALL BE DONE BY MACHINING ONLY TO GRADE No. N10.
2. REMOVE ALL SHARP EDGES & BURRS.

QTY	DESCRIPTION	DIMENSIONS	ITEM NO.	REF. DRGS	MATL.SPEC.	WT/UNIT IN KGS	REMARKS
1	RIB	8x100x296	1		IRS M-41-97	1.84	

GROUP: 1-2 Head Stock | SURFACE AREA IN Sq.m.: | WT/ASSY IN Kgs:

RIB

SCALE 1:2	SSE/D	
	CHD	
ALT. -	ALTD	
	DRN	S MUTHUKUMARAN

REF.DRG.NO.

DATE OF LATEST ALT.	DATE OF FIRST ISSUE	AME/SME
	21-05-2024	

INDIAN RAILWAY STANDARDS
INTEGRAL COACH FACTORY, CHENNAI - 600038

SHEET 1 OF 1

AAB12096 A3

AAB12097

▽ ROUGH MACHINED	(01) ROUGH CLEANED
▽▽ FINISH MACHINED	(01b) BURRS REMOVED
▽▽▽ FINE FINISH MACHINED	(18) CHAMFERED

REVISIONS			
ALT.	ZONE	DESCRIPTION	APPROVED & DATE
a		RM SIZE ALTD.	

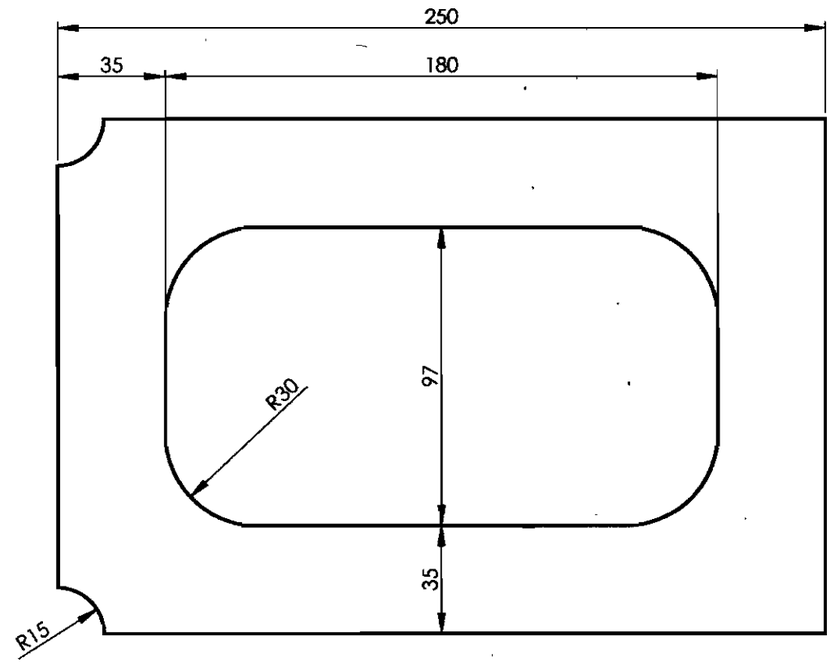

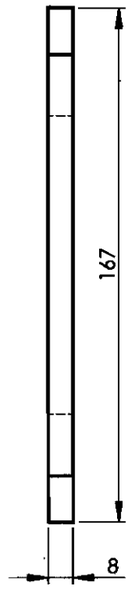

ALL DIMENSIONS ARE IN mm UNLESS OTHERWISE SPECIFIED. FOR UNTOLERANCED DIMENSIONS AND ROUGHNESS VALUES, REFER DRAWING NO ICF/STD-9-0-001.
ANY MANUAL ALTERATION SHALL AUTOMATICALLY RENDER THIS DRAWING INVALID. WELDING SYMBOLS ARE AS PER EN ISO 2553.
WEIGHT GIVEN IN DRAWING IS FOR INDICATIVE PURPOSE ONLY

NOTE:

1. ALL EDGE PREPARATION SHALL BE DONE BY MACHINING ONLY TO GRADE No. N10.
2. REMOVE ALL SHARP EDGES & BURRS.

QTY	DESCRIPTION	DIMENSIONS	ITEM NO.	REF. DRGS	MATL.SPEC.	WT/UNIT IN KGS	REMARKS
1	RIB	8x167x250	1		IRS M-41-97	1.55	

GROUP: 1-2 | SURFACE AREA IN Sq.m.: | WT/ASSY IN Kgs:

RIB

SCALE 1:2	SSE/D	
	CHD	
ALT. a	ALTD	MUTHU KUMARAN S
	DRN	MUTHU KUMARAN S

INDIAN RAILWAY STANDARDS
INTEGRAL COACH FACTORY, CHENNAI - 600038

SHEET 1 OF 1

AAB12097 | A3

REF.DRG.NO.	25-02-2026	21-05-2024	AME/SME
	DATE OF LATEST ALT.	DATE OF FIRST ISSUE	

AAB12102

▽ ROUGH MACHINED	(01) ROUGH CLEANED		
▽▽ FINISH MACHINED	(01b) BURRS REMOVED		
▽▽▽ FINE FINISH MACHINED	(18) CHAMFERED		

REVISIONS			
ALT.	ZONE	DESCRIPTION	APPROVED & DATE
a		DESIGN REVISED	SD/-
b		DESIGN REVISED	

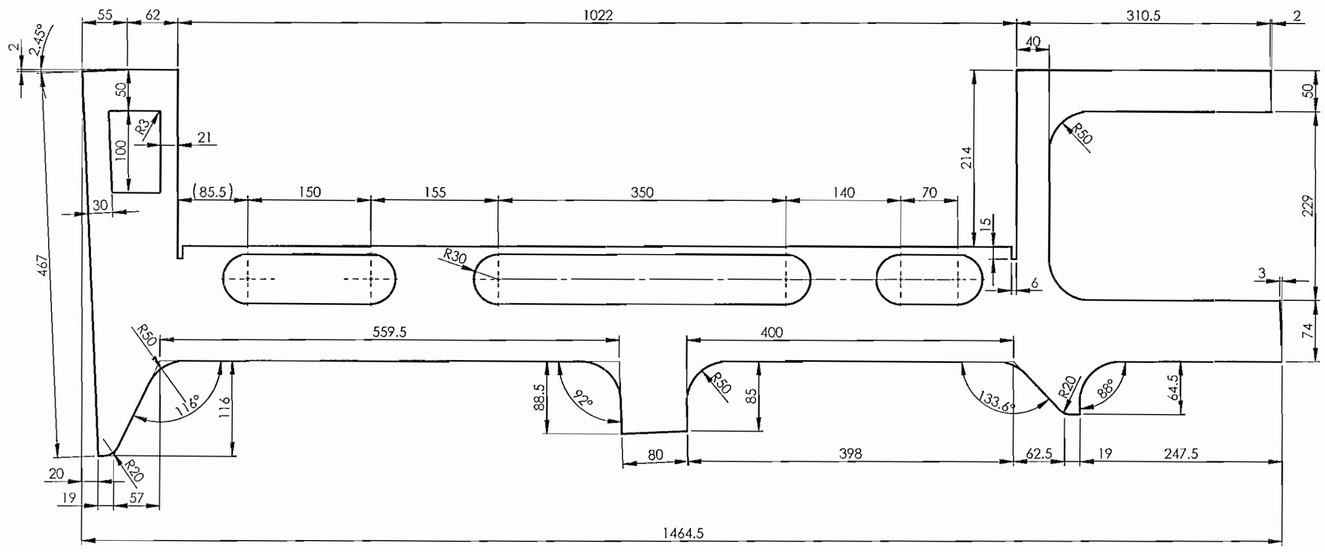

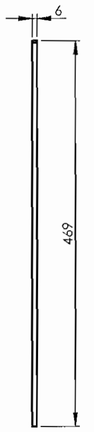

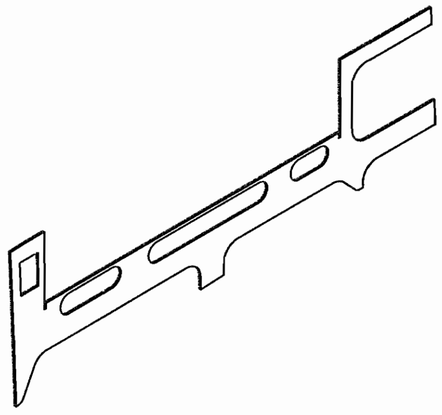

NOTE:

1. ALL EDGE PREPARATION SHALL BE DONE BY MACHINING ONLY TO GRADE No. N10.
2. REMOVE ALL SHARP EDGES & BURRS.

QTY	DESCRIPTION	DIMENSIONS	ITEM NO.	REF. DRGS	MATL.SPEC.	WT/UNIT IN KGS	REMARKS
1	BOTTOM SUPPORT PLATE	6x469x1465	1		IRS M-41-97	9.38	

GROUP: 1-2 | SURFACE AREA IN Sq.m.: | WT/ASSY IN Kgs:

BOTTOM SUPPORT PLATE

SCALE 1:5 | SSE/D | CHD | ALT b | ALTD | MUTHU KUMARAN S | DRN | MUTHU KUMARAN S

INDIAN RAILWAY STANDARDS
INTEGRAL COACH FACTORY, CHENNAI - 600038

SHEET 1 OF 1

AAB12102 A2

DATE OF LATEST ALT.	DATE OF FIRST ISSUE	AME/SME
26-11-2025	22-05-2024	

REF.DRG.NO.

ALL DIMENSIONS ARE IN mm UNLESS OTHERWISE SPECIFIED. FOR UNTOLERANCED DIMENSIONS AND ROUGHNESS VALUES, REFER DRAWING NO ICF/STD-9-0-001.
ANY MANUAL ALTERATION SHALL AUTOMATICALLY RENDER THIS DRAWING INVALID. WELDING SYMBOLS ARE AS PER EN ISO 2553. WEIGHT GIVEN IN DRAWING IS FOR INDICATIVE PURPOSE ONLY

AAB12103

▽ ROUGH MACHINED	(01) ROUGH CLEANED
▽▽ FINISH MACHINED	(01b) BURRS REMOVED
▽▽▽ FINE FINISH MACHINED	(18) CHAMFERED

REVISIONS			
ALT.	ZONE	DESCRIPTION	APPROVED & DATE
a		DESIGN REVISED.	

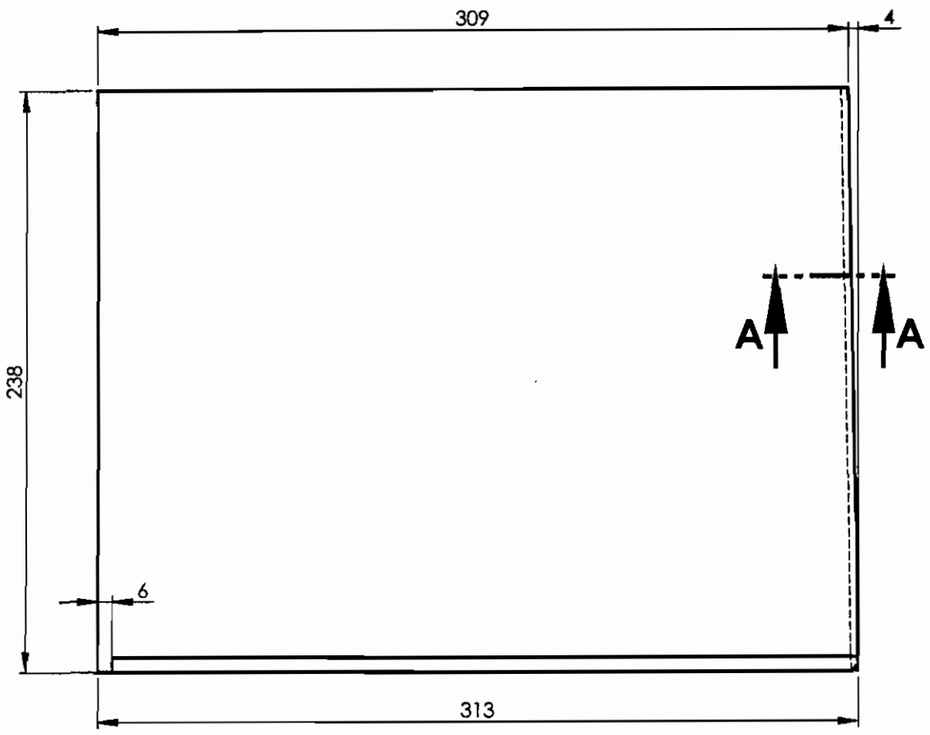

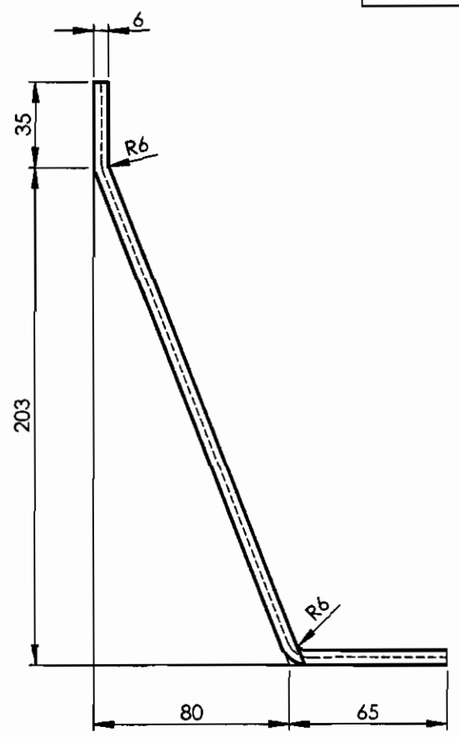

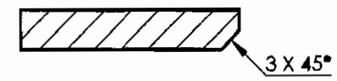

SECTION A-A
SCALE 1 : 1

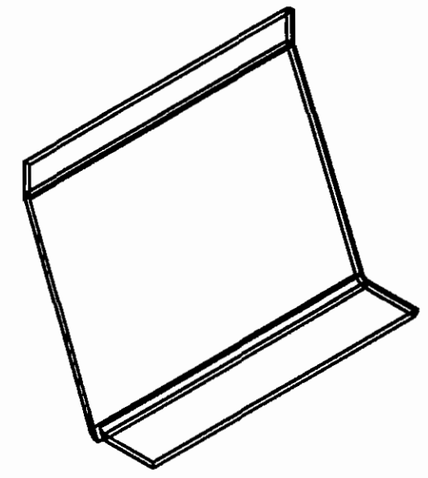

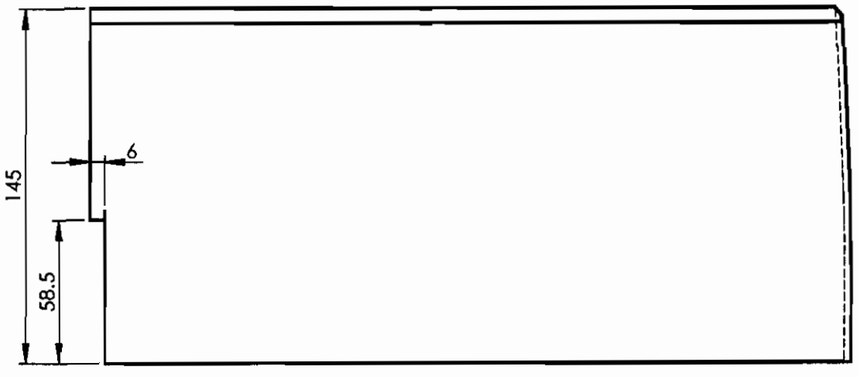

NOTE:

1. ALL EDGE PREPARATION SHALL BE DONE BY MACHINING ONLY TO GRADE No. N10.
2. REMOVE ALL SHARP EDGES & BURRS.

ALL DIMENSIONS ARE IN mm UNLESS OTHERWISE SPECIFIED. FOR UNTOLERANCED DIMENSIONS AND ROUGHNESS VALUES, REFER DRAWING NO ICF/STD-9-0-001.
ANY MANUAL ALTERATION SHALL AUTOMATICALLY RENDER THIS DRAWING INVALID. WELDING SYMBOLS ARE AS PER EN ISO 2553.
WEIGHT GIVEN IN DRAWING IS FOR INDICATIVE PURPOSE ONLY

QTY	DESCRIPTION	DIMENSIONS	ITEM NO.	REF. DRGS	MATL.SPEC.	WT/UNIT IN KGS	REMARKS
1	SOLE BAR	6x310x313	1		IRS M-41-97	4.54	

GROUP: 1-2 | SURFACE AREA IN Sq.m.: | WT/ASSY IN Kgs:

SOLE BAR

SCALE	SSE/D	
1:2.5	CHD	
ALT. a	ALTD	MUTHU KUMARAN S
	DRN	MUTHU KUMARAN S

INDIAN RAILWAY STANDARDS
INTEGRAL COACH FACTORY, CHENNAI - 600038

SHEET 1 OF 1

AAB12103 | A3

REF.DRG.NO.	12-07-2024	22-05-2024	
	DATE OF LATEST ALT.	DATE OF FIRST ISSUE	AME/SME

AAB12104

▽ ROUGH MACHINED	(01) ROUGH CLEANED
▽▽ FINISH MACHINED	(01b) BURRS REMOVED
▽▽▽ FINE FINISH MACHINED	(18) CHAMFERED

REVISIONS			
ALT.	ZONE	DESCRIPTION	APPROVED & DATE
a		DESIGN REVISED.	

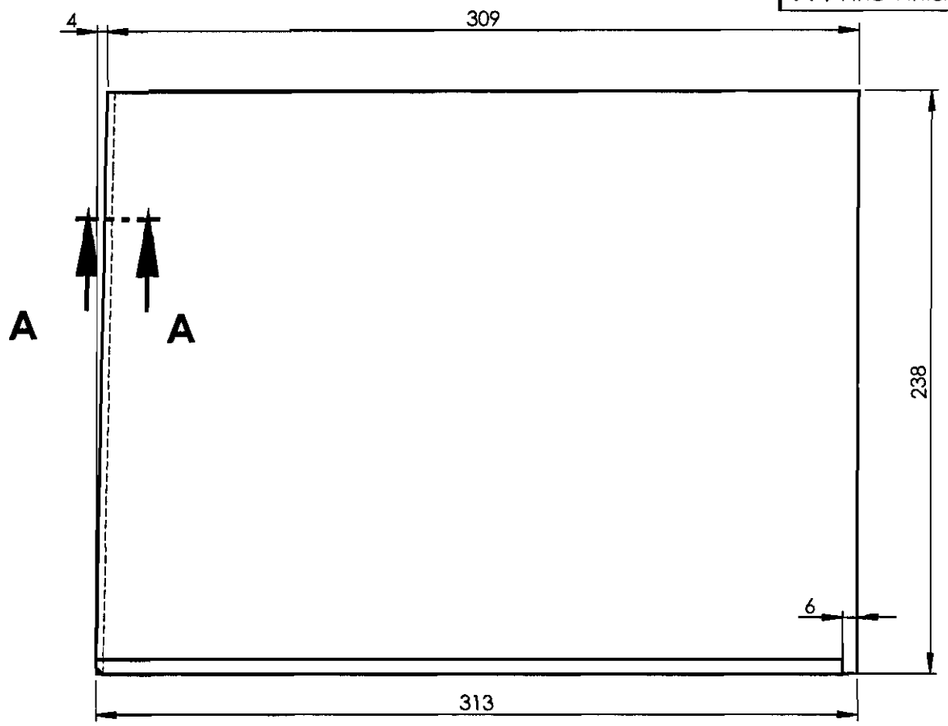

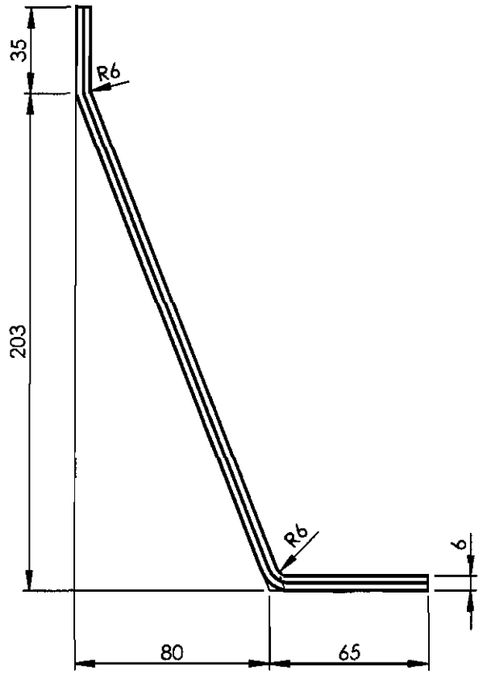



SECTION A-A
SCALE 1 : 1

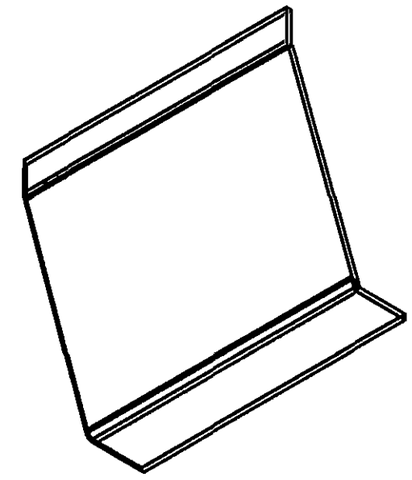

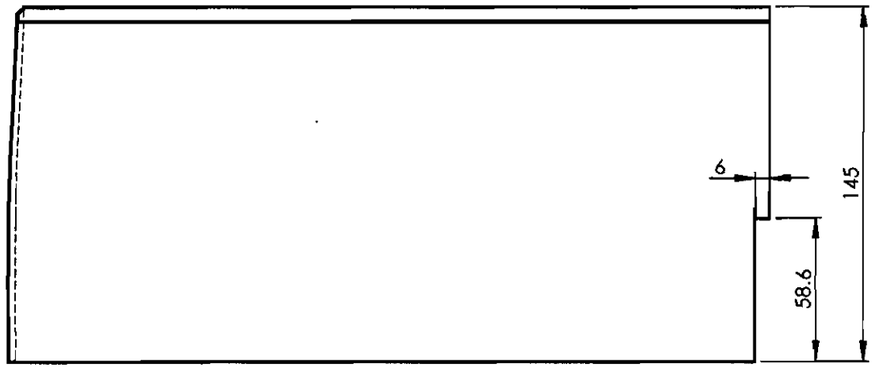

NOTE:

1. ALL EDGE PREPARATION SHALL BE DONE BY MACHINING ONLY TO GRADE No. N10.
2. REMOVE ALL SHARP EDGES & BURRS.

QTY	DESCRIPTION	DIMENSIONS	ITEM NO.	REF. DRGS	MATL.SPEC.	WT/UNIT IN KGS	REMARKS
1	SOLE BAR	6x310x313	1		IRS M-41-97	4.54	

GROUP: 1-2 | SURFACE AREA IN Sq.m.: | WT/ASSY IN Kgs:

SOLE BAR

SCALE 1:5	SSE/D	
	CHD	
ALT. a	ALTD	MUTHU KUMARAN S
	DRN	MUTHU KUMARAN S

INDIAN RAILWAY STANDARDS
INTEGRAL COACH FACTORY, CHENNAI - 600038

SHEET 1 OF 1

AAB12104 A3

12-07-2024	22-05-2024	
DATE OF LATEST ALT.	DATE OF FIRST ISSUE	AME/SME

REF.DRG.NO.

ALL DIMENSIONS ARE IN mm UNLESS OTHERWISE SPECIFIED. FOR UNTOLERANCED DIMENSIONS AND ROUGHNESS VALUES, REFER DRAWING NO ICF/STD-9-0-001.
ANY MANUAL ALTERATION SHALL AUTOMATICALLY RENDER THIS DRAWING INVALID. WELDING SYMBOLS ARE AS PER EN ISO 2553.
WEIGHT GIVEN IN DRAWING IS FOR INDICATIVE PURPOSE ONLY

AAB12105

▽ ROUGH MACHINED	(01) ROUGH CLEANED
▽▽ FINISH MACHINED	(01b) BURRS REMOVED
▽▽▽ FINE FINISH MACHINED	(18) CHAMFERED

REVISIONS			
ALT.	ZONE	DESCRIPTION	APPROVED & DATE
a		DESIGN REVISED.	

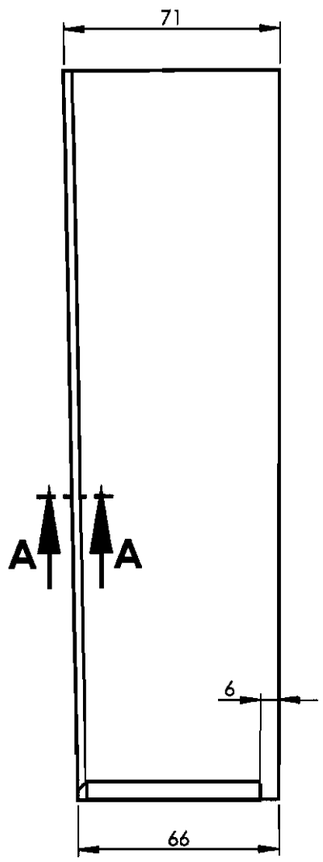

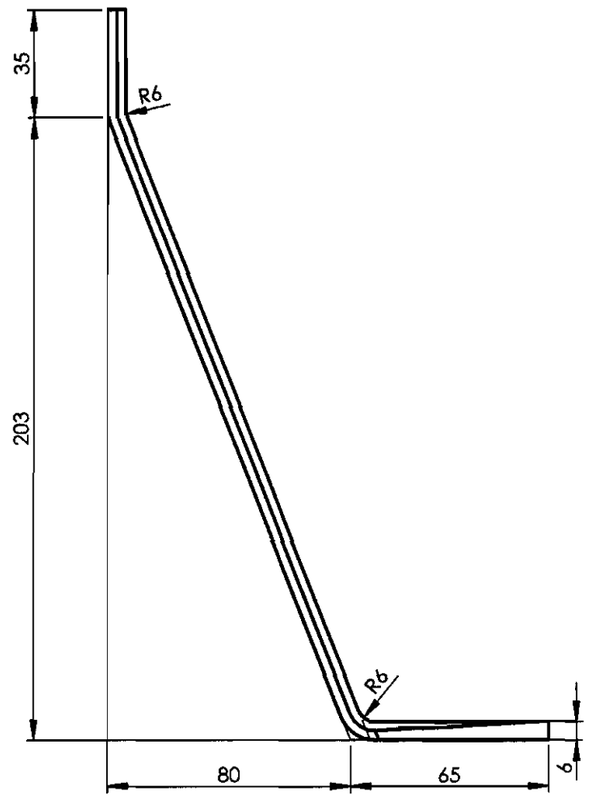

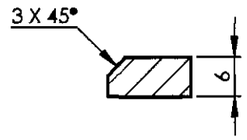

SECTION A-A
SCALE 1 : 1

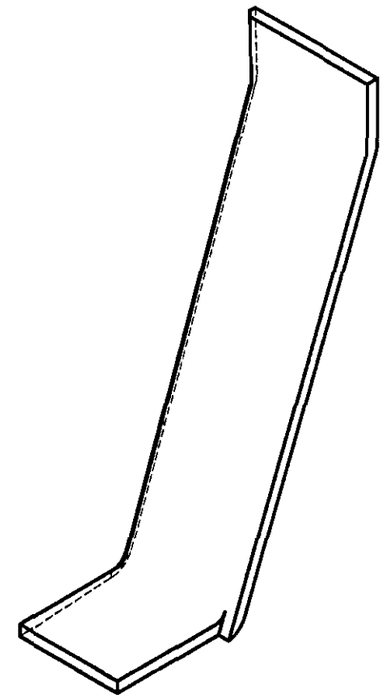

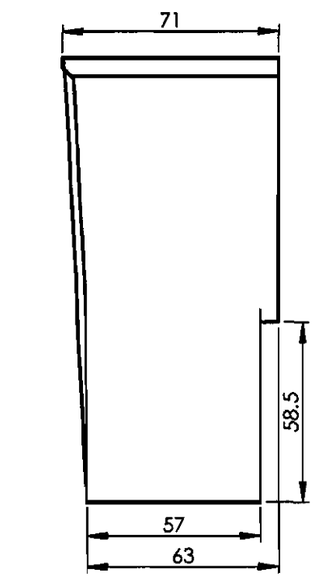

NOTE:

1. ALL EDGE PREPARATION SHALL BE DONE BY MACHINING ONLY TO GRADE No. N10.
2. REMOVE ALL SHARP EDGES & BURRS.

ALL DIMENSIONS ARE IN mm UNLESS OTHERWISE SPECIFIED. FOR UNTOLERANCED DIMENSIONS AND ROUGHNESS VALUES, REFER DRAWING NO ICF/STD-9-0-001.
ANY MANUAL ALTERATION SHALL AUTOMATICALLY RENDER THIS DRAWING INVALID. WELDING SYMBOLS ARE AS PER EN ISO 2553.
WEIGHT GIVEN IN DRAWING IS FOR INDICATIVE PURPOSE ONLY

REF.DRG.NO.

QTY	DESCRIPTION	DIMENSIONS	ITEM NO.	REF. DRGS	MATL.SPEC.	WT/UNIT IN KGS	REMARKS
1	SOLE BAR	6x71x312	1		IRS M-41-97	0.97	

GROUP: 1-2 | SURFACE AREA IN Sq.m.: | WT/ASSY IN Kgs:

SOLE BAR

SCALE 1:5	SSE/D	
	CHD	
ALT. a	ALTD	MUTHU KUMARAN S
	DRN	MUTHU KUMARAN S

DATE OF LATEST ALT.	DATE OF FIRST ISSUE	AME/SME
12-07-2024	22-05-2024	

INDIAN RAILWAY STANDARDS
INTEGRAL COACH FACTORY, CHENNAI - 600038

SHEET 1 OF 1

AAB12105 A3

AAB12106

▽ ROUGH MACHINED	(01) ROUGH CLEANED
▽▽ FINISH MACHINED	(01b) BURRS REMOVED
▽▽▽ FINE FINISH MACHINED	(18) CHAMFERED

REVISIONS			
ALT.	ZONE	DESCRIPTION	APPROVED & DATE
a		DESIGN REVISED.	

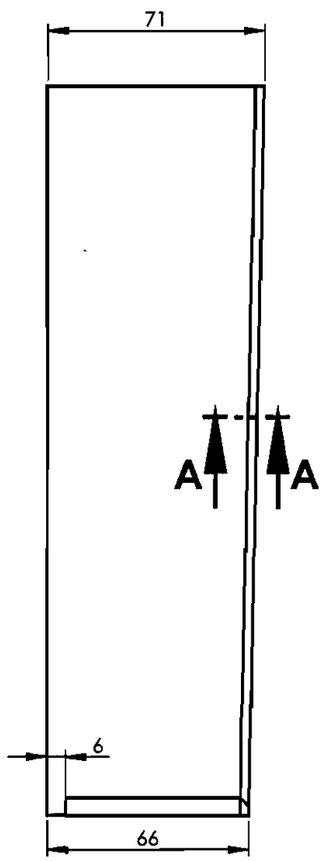

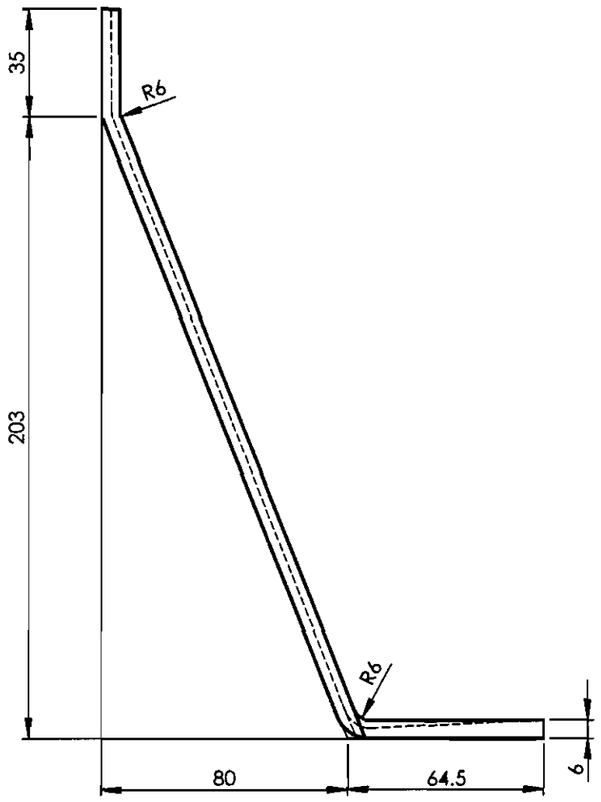

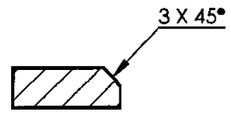

SECTION A-A
SCALE 1 : 1

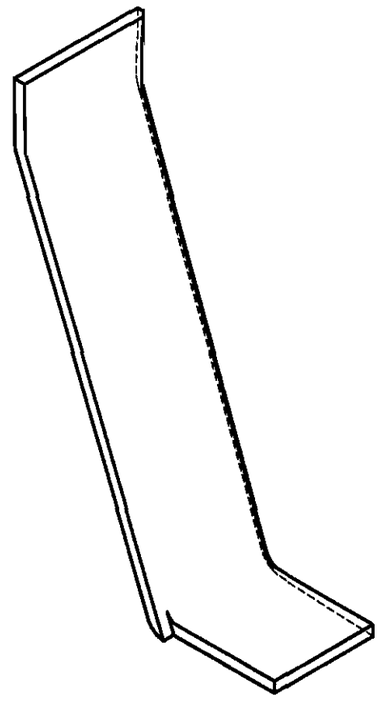

NOTE:

1. ALL EDGE PREPARATION SHALL BE DONE BY MACHINING ONLY TO GRADE No. N10.
2. REMOVE ALL SHARP EDGES & BURRS.

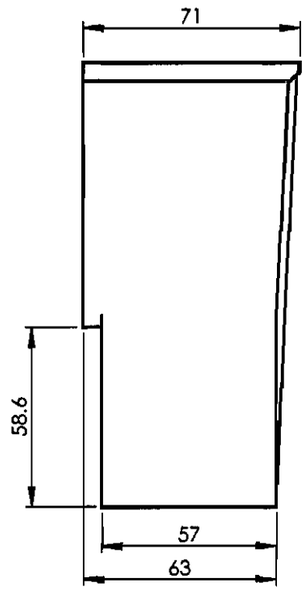

ALL DIMENSIONS ARE IN mm UNLESS OTHERWISE SPECIFIED. FOR UNTOLERANCED DIMENSIONS AND ROUGHNESS VALUES, REFER DRAWING NO ICF/STD-9-0-001.
ANY MANUAL ALTERATION SHALL AUTOMATICALLY RENDER THIS DRAWING INVALID. WELDING SYMBOLS ARE AS PER EN ISO 2553.
WEIGHT GIVEN IN DRAWING IS FOR INDICATIVE PURPOSE ONLY

REF.DRG.NO.

QTY	DESCRIPTION	DIMENSIONS	ITEM NO.	REF. DRGS	MATL.SPEC.	WT/UNIT IN KGS	REMARKS
1	SOLEBAR	6x71x312	1		IRS M-41-97	0.97	

GROUP: 1-2 | SURFACE AREA IN Sq.m.: | WT/ASSY IN Kgs:

SOLEBAR

SCALE	SSE/D	
1:5	CHD	
ALT. a	ALTD	MUTHU KUMARAN S
	DRN	MUTHU KUMARAN S

DATE OF LATEST ALT.	DATE OF FIRST ISSUE	AME/SME
12-07-2024	22-05-2024	

INDIAN RAILWAY STANDARDS
INTEGRAL COACH FACTORY, CHENNAI - 600038

SHEET 1 OF 1

AAB12106 A3

AAB12111

▽ ROUGH MACHINED	(01) ROUGH CLEANED
▽▽ FINISH MACHINED	(01b) BURRS REMOVED
▽▽▽ FINE FINISH MACHINED	(18) CHAMFERED

REVISIONS			
ALT.	ZONE	DESCRIPTION	APPROVED & DATE
a		DESIGN REVISED.	

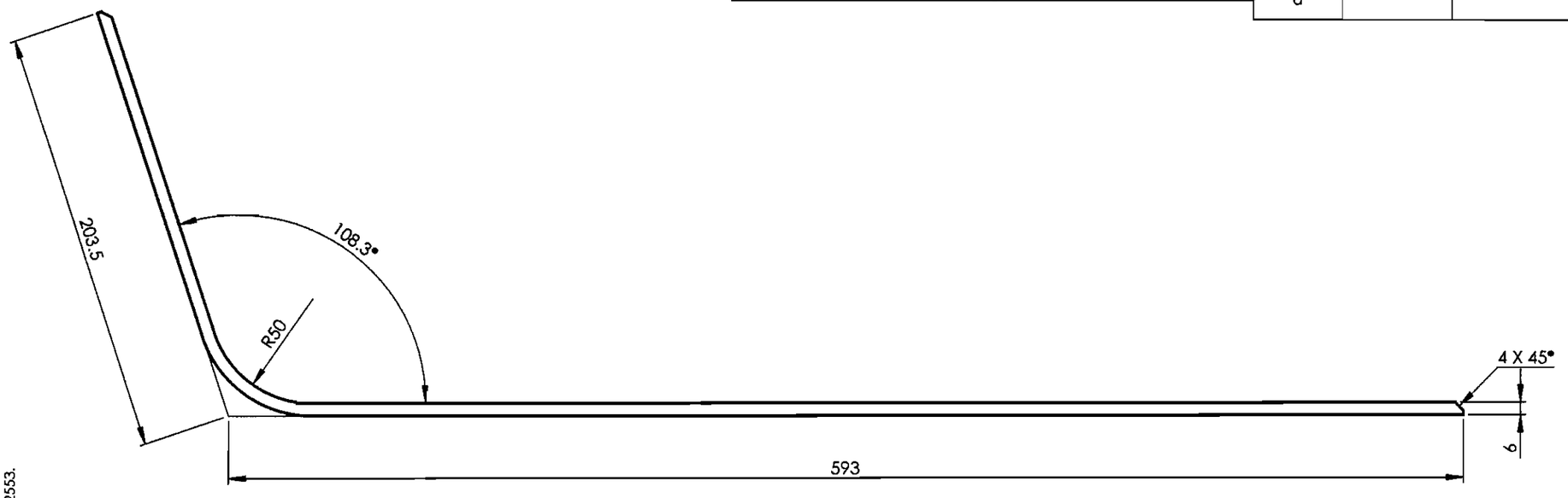

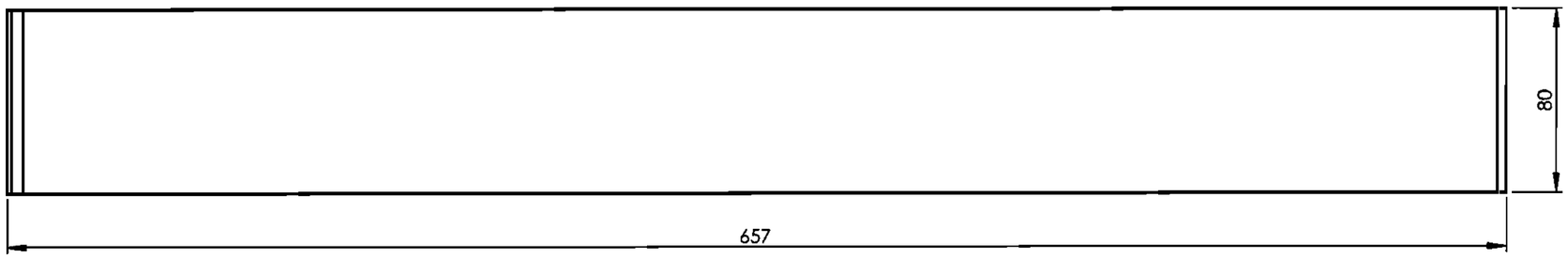

ALL DIMENSIONS ARE IN mm UNLESS OTHERWISE SPECIFIED. FOR UNTOLERANCED DIMENSIONS AND ROUGHNESS VALUES, REFER DRAWING NO ICF/STD-9-0-001.
ANY MANUAL ALTERATION SHALL AUTOMATICALLY RENDER THIS DRAWING INVALID. WELDING SYMBOLS ARE AS PER EN ISO 2553.
WEIGHT GIVEN IN DRAWING IS FOR INDICATIVE PURPOSE ONLY

NOTE:

1. ALL EDGE PREPARATION SHALL BE DONE BY MACHINING ONLY TO GRADE No. N10.
2. REMOVE ALL SHARP EDGES & BURRS.

QTY	DESCRIPTION	DIMENSIONS	ITEM NO.	REF. DRGS	MATL.SPEC.	WT/UNIT IN KGS	REMARKS
1	ANGLE	6x80x782	1		IRS M-41-97	2.94	

GROUP: 1-2 | SURFACE AREA IN Sq.m.: | WT/ASSY IN Kgs:

ANGLE

SCALE 1:5	SSE/D	
	CHD	
ALT. a	ALTD	MUTHU KUMARAN S
	DRN	MUTHU KUMARAN S

INDIAN RAILWAY STANDARDS
INTEGRAL COACH FACTORY, CHENNAI - 600038

SHEET 1 OF 1

AAB12111 | A3

REF.DRG.NO.	DATE OF LATEST ALT.	DATE OF FIRST ISSUE	AME/SME
	16-07-2024	22-05-2024	

AAB12113

▽ ROUGH MACHINED	(01) ROUGH CLEANED
▽▽ FINISH MACHINED	(01b) BURRS REMOVED
▽▽▽ FINE FINISH MACHINED	(18) CHAMFERED

REVISIONS			
ALT.	ZONE	DESCRIPTION	APPROVED & DATE
a		MATERIAL ALTD.	
b		SIZE REVISED	

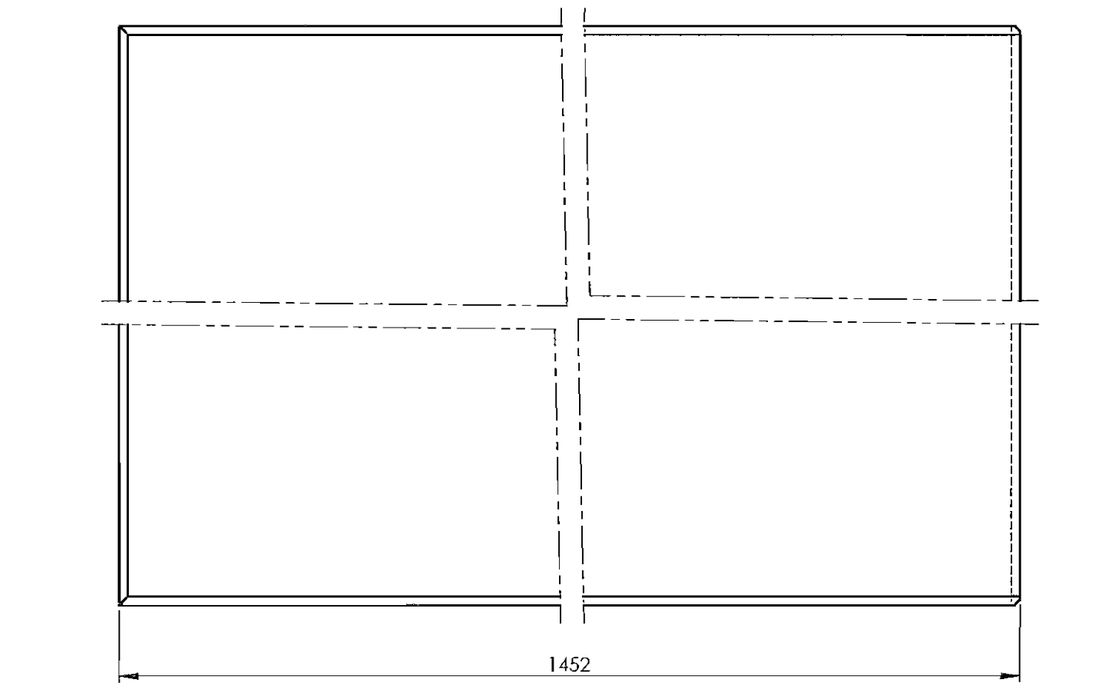

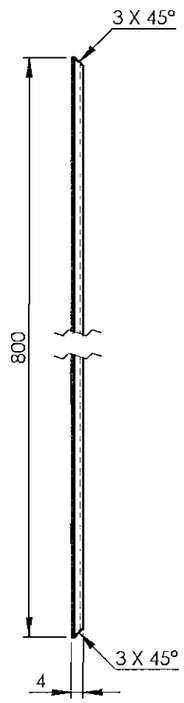

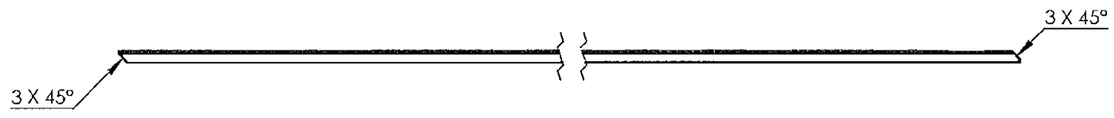

ALL DIMENSIONS ARE IN mm UNLESS OTHERWISE SPECIFIED. FOR UNTOLERANCED DIMENSIONS AND ROUGHNESS VALUES, REFER DRAWING NO ICF/STD-9-0-001.
ANY MANUAL ALTERATION SHALL AUTOMATICALLY RENDER THIS DRAWING INVALID. WELDING SYMBOLS ARE AS PER EN ISO 2553.
WEIGHT GIVEN IN DRAWING IS FOR INDICATIVE PURPOSE ONLY

NOTE:

1. ALL EDGE PREPARATION SHALL BE DONE BY MACHINING ONLY TO GRADE No. N10.
2. REMOVE ALL SHARP EDGES & BURRS.

QTY	DESCRIPTION	DIMENSIONS	ITEM NO.	REF. DRGS	MATL.SPEC.	WT/UNIT IN KGS	REMARKS
1	MIDDLE FLOOR SHEET	4x800x1452	1		RDSO SPEC C-K201 X2 Cr Ni N 18 7	37.01	

GROUP: 1-2 | SURFACE AREA IN Sq.m.: | WT/ASSY IN Kgs:

MIDDLE FLOOR SHEET

SCALE 1:10	SSE/D	
	CHD	
ALT. b	ALTD	MUTHU KUMARAN S
	DRN	MUTHU KUMARAN S

INDIAN RAILWAY STANDARDS
INTEGRAL COACH FACTORY, CHENNAI - 600038

SHEET 1 OF 1

AAB12113 A3

REF.DRG.NO.	DATE OF LATEST ALT.	DATE OF FIRST ISSUE	AME/SME
	10-12-2025	22-05-2024	

AAB12114

▽ ROUGH MACHINED	(01) ROUGH CLEANED
▽▽ FINISH MACHINED	(01b) BURRS REMOVED
▽▽▽ FINE FINISH MACHINED	(18) CHAMFERED

REVISIONS

ALT.	ZONE	DESCRIPTION	APPROVED & DATE
a		Ø65 & Ø45 HOLES DELETED, MATERIAL ALTD.	
b		DESIGN REVISED	
c		LOCATING DIM OF Ø44 HOLE ALTD	

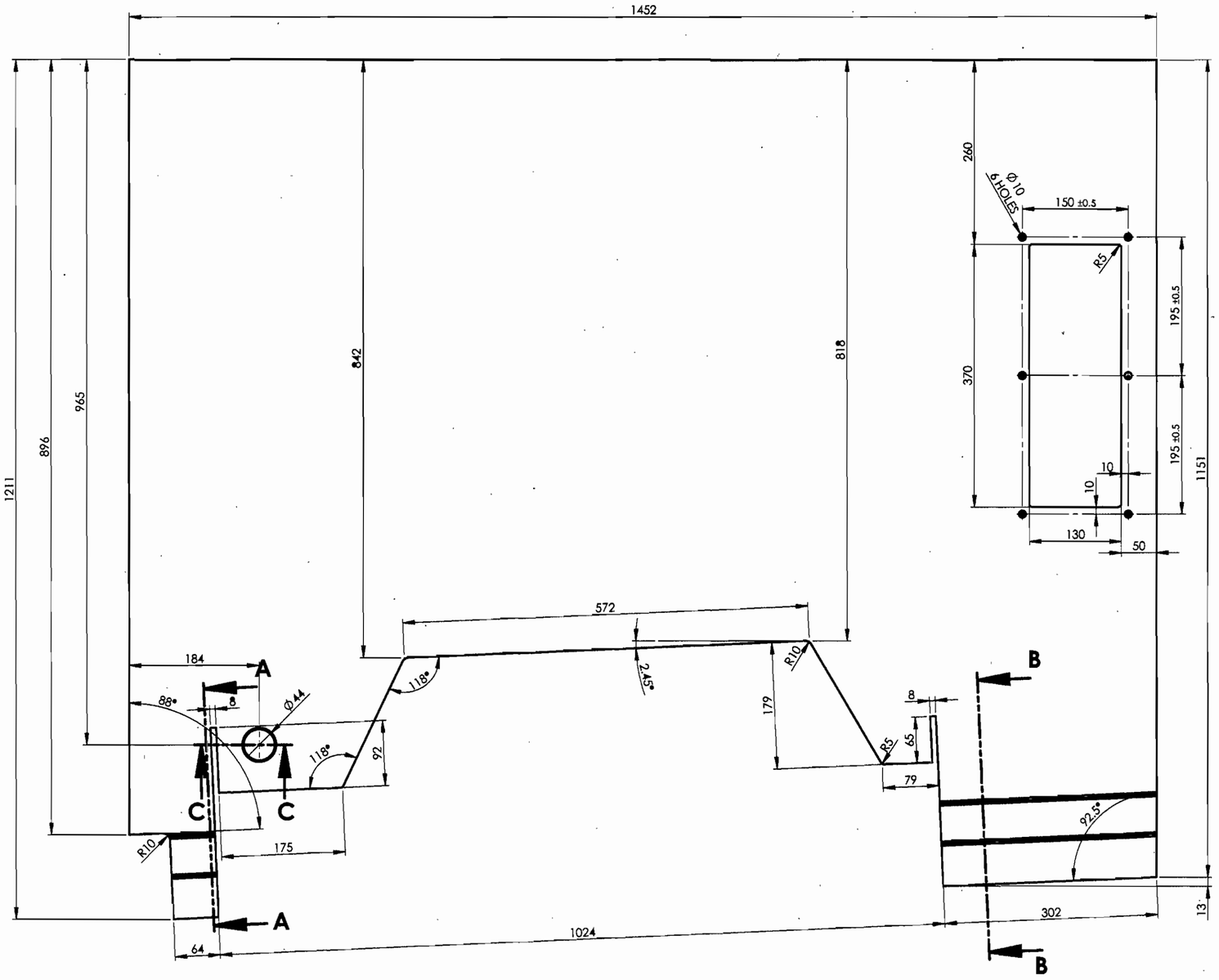

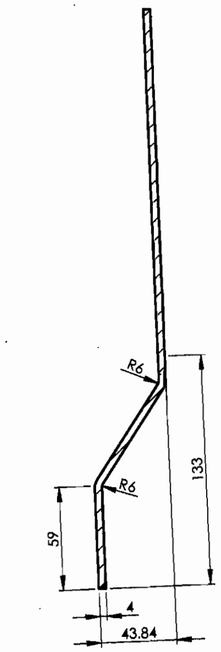

SECTION A-A
SCALE 1 : 2.5

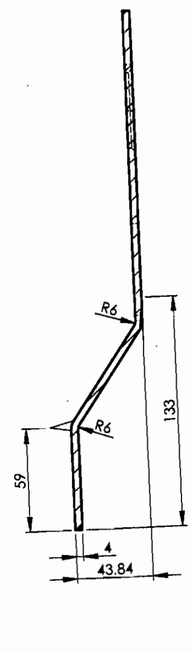

SECTION B-B
SCALE 1 : 2.5

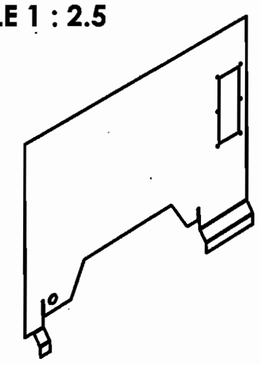

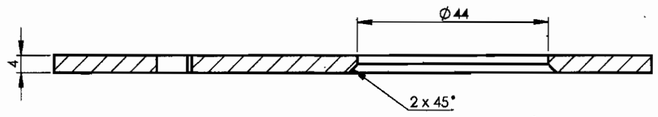

SECTION C-C
SCALE 1 : 1

NOTE:

1. ALL EDGE PREPARATION SHALL BE DONE BY MACHINING ONLY TO GRADE No. N10.
2. REMOVE ALL SHARP EDGES & BURRS.

ALL DIMENSIONS ARE IN mm UNLESS OTHERWISE SPECIFIED. FOR UNTOLERANCED DIMENSIONS AND ROUGHNESS VALUES, REFER DRAWING NO ICF/STD-9-0-001.
ANY MANUAL ALTERATION SHALL AUTOMATICALLY RENDER THIS DRAWING INVALID. WELDING SYMBOLS ARE AS PER EN ISO 2553. WEIGHT GIVEN IN DRAWING IS FOR INDICATIVE PURPOSE ONLY

REF.DRG.NO.

QTY	DESCRIPTION	DIMENSIONS	ITEM NO.	REF. DRGS	MATL.SPEC.	WT/UNIT IN KGS	REMARKS
1	FLOOR SHEET RH	4x1226x1452	1		RDSO SPEC C-K201 X2 Cr Ni N 18 7	43.65	

GROUP: 1-2 | SURFACE AREA IN Sq.m.: | WT/ASSY IN Kgs:

FLOOR SHEET RH

SCALE 1:10	SSE/D	
	CHD	
ALT c	ALTD	MUTHU KUMARAN S
	DRN	MUTHU KUMARAN S

INDIAN RAILWAY STANDARDS
INTEGRAL COACH FACTORY, CHENNAI - 600038

SHEET 1 OF 1

AAB12114 A2

13-03-2026	22-05-2024	AME/SME
DATE OF LATEST ALT.	DATE OF FIRST ISSUE	

AAB12115

▽ ROUGH MACHINED	(01) ROUGH CLEANED
▽▽ FINISH MACHINED	(01b) BURRS REMOVED
▽▽▽ FINE FINISH MACHINED	(18) CHAMFERED

REVISIONS

ALT.	ZONE	DESCRIPTION	APPROVED & DATE
a		Ø65 & Ø45 HOLES DELETED, MATERIAL ALTD.	
b		DESIGN REVISED	
c		LOCATING DIM OF Ø44 HOLE ALTD	

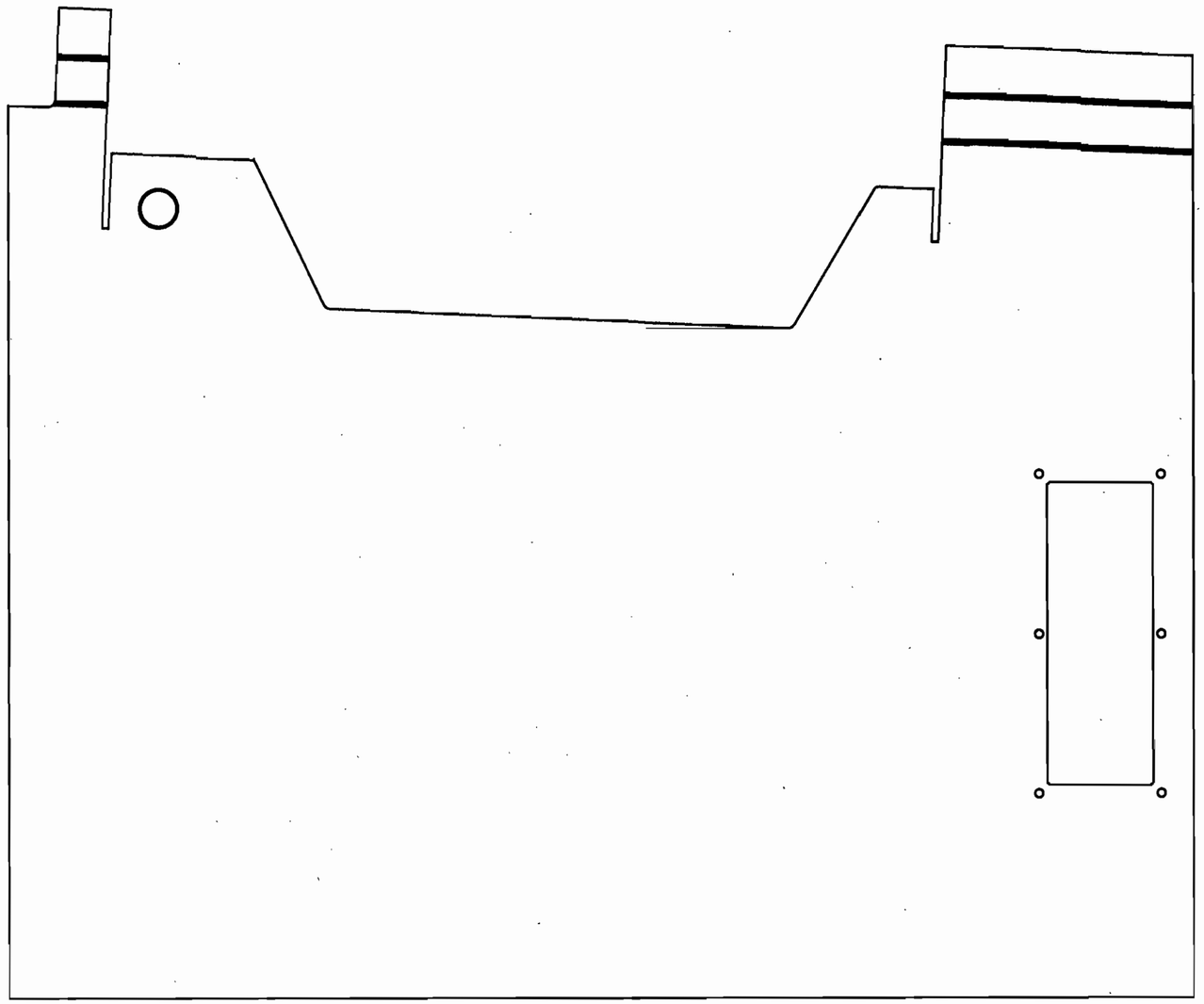

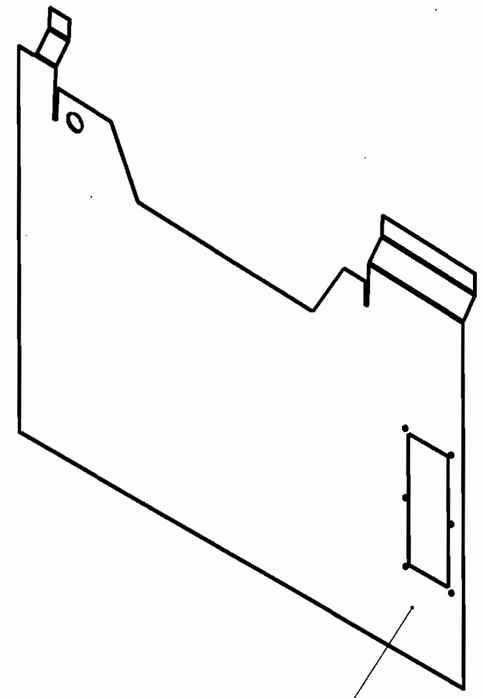

THIS ITEM IS OPPOSITE TO THE ITEM No AAB12114 SO REFER THE DRG. FOR DETAILS.

ALL DIMENSIONS ARE IN mm UNLESS OTHERWISE SPECIFIED. FOR UNTOLERANCED DIMENSIONS AND ROUGHNESS VALUES, REFER DRAWING NO ICF/STD-9-0-001.
ANY MANUAL ALTERATION SHALL AUTOMATICALLY RENDER THIS DRAWING INVALID. WELDING SYMBOLS ARE AS PER EN ISO 2553. WEIGHT GIVEN IN DRAWING IS FOR INDICATIVE PURPOSE ONLY

NOTE:

1. ALL EDGE PREPARATION SHALL BE DONE BY MACHINING ONLY TO GRADE No. N10.
2. REMOVE ALL SHARP EDGES & BURRS.

QTY	DESCRIPTION	DIMENSIONS	ITEM NO.	REF. DRGS	MATL.SPEC.	WT/UNIT IN KGS	REMARKS
1	FLOOR SHEET LH	4x1226x1452	1		RDSO SPEC C-K201 X2 Cr Ni N 18 7	43.65	

GROUP: 1-2 | SURFACE AREA IN Sq.m.: | WT/ASSY IN Kgs:

FLOOR SHEET LH

SCALE 1:10	SSE/D	
	CHD	
ALT c	ALTD	MUTHU KUMARAN S
	DRN	MUTHU KUMARAN S

INDIAN RAILWAY STANDARDS
INTEGRAL COACH FACTORY, CHENNAI - 600038

SHEET 1 OF 1

AAB12115 A2

REF.DRG.NO.	DATE OF LATEST ALT.	DATE OF FIRST ISSUE	AME/SME
	13-03-2026	22-05-2024	

AAB12117

ROUGH MACHINED	(01) ROUGH CLEANED
FINISH MACHINED	(01b) BURRS REMOVED
FINE FINISH MACHINED	(18) CHAMFERED

REVISIONS

ALT.	ZONE	DESCRIPTION	APPROVED & DATE
a		RM SIZE ALTD.	

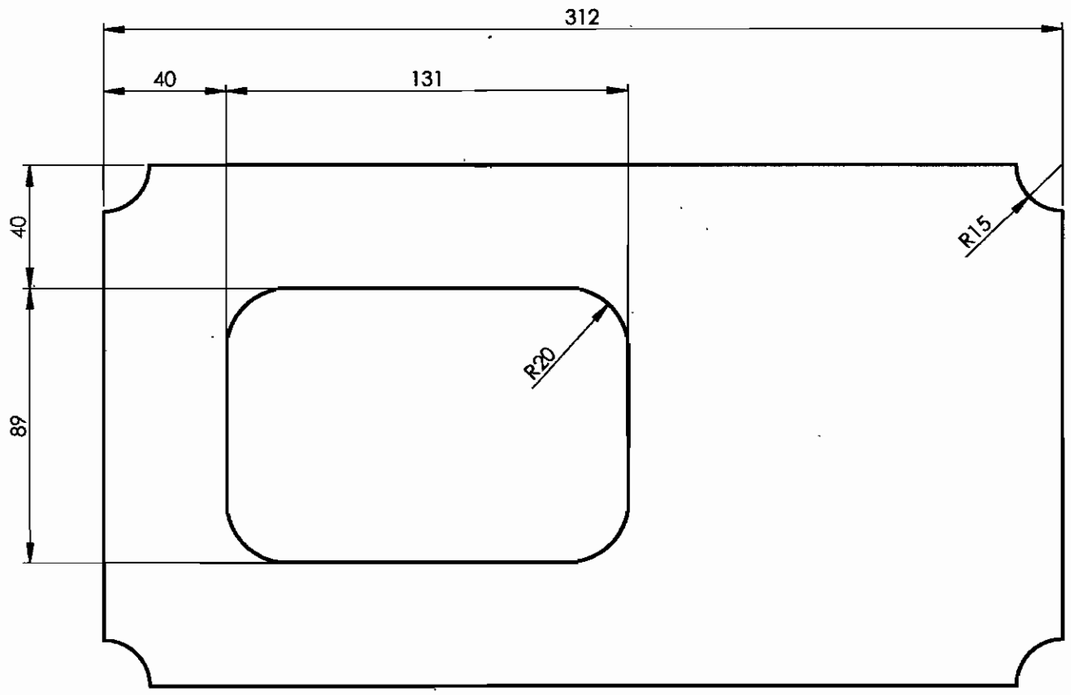

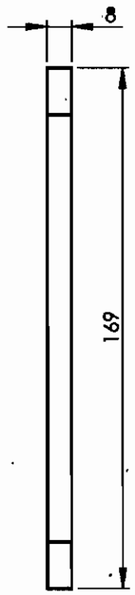

ALL DIMENSIONS ARE IN mm UNLESS OTHERWISE SPECIFIED. FOR UNTOLERANCED DIMENSIONS AND ROUGHNESS VALUES, REFER DRAWING NO ICF/STD-9-0-001.
ANY MANUAL ALTERATION SHALL AUTOMATICALLY RENDER THIS DRAWING INVALID. WELDING SYMBOLS ARE AS PER EN ISO 2553.
WEIGHT GIVEN IN DRAWING IS FOR INDICATIVE PURPOSE ONLY

NOTE:

1. ALL EDGE PREPARATION SHALL BE DONE BY MACHINING ONLY TO GRADE No. N10.
2. REMOVE ALL SHARP EDGES & BURRS.

QTY	DESCRIPTION	DIMENSIONS	ITEM NO.	REF. DRGS	MATL.SPEC.	WT/UNIT IN KGS	REMARKS
1	RIB	8x169x312	1		IRS M-41-97	2.56	

GROUP: 1-2 | SURFACE AREA IN Sq.m.: | WT/ASSY IN Kgs:

RIB

SCALE		
1:2	SSE/D	
	CHD	
ALT. a	ALTD	MUTHU KUMARAN S
	DRN	MUTHU KUMARAN S

INDIAN RAILWAY STANDARDS
INTEGRAL COACH FACTORY, CHENNAI - 600038

SHEET 1 OF 1

AAB12117 A3

REF.DRG.NO.	25-02-2026	25-05-2024	AME/SME
	DATE OF LATEST ALT.	DATE OF FIRST ISSUE	

AAB12127

▽ ROUGH MACHINED	(01) ROUGH CLEANED
▽▽ FINISH MACHINED	(215) BURRS REMOVED
▽▽▽ FINE FINISH MACHINED	(18) CHAMFERED

REVISIONS			
ALT.	ZONE	DESCRIPTION	APPROVED & DATE
a		Ø30 HOLE ADDED	

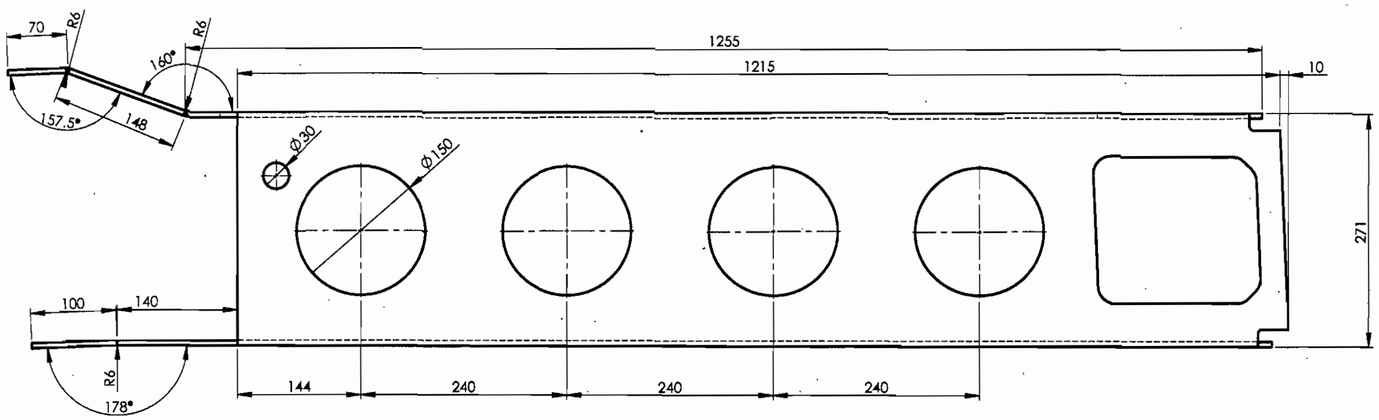

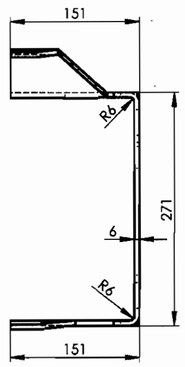

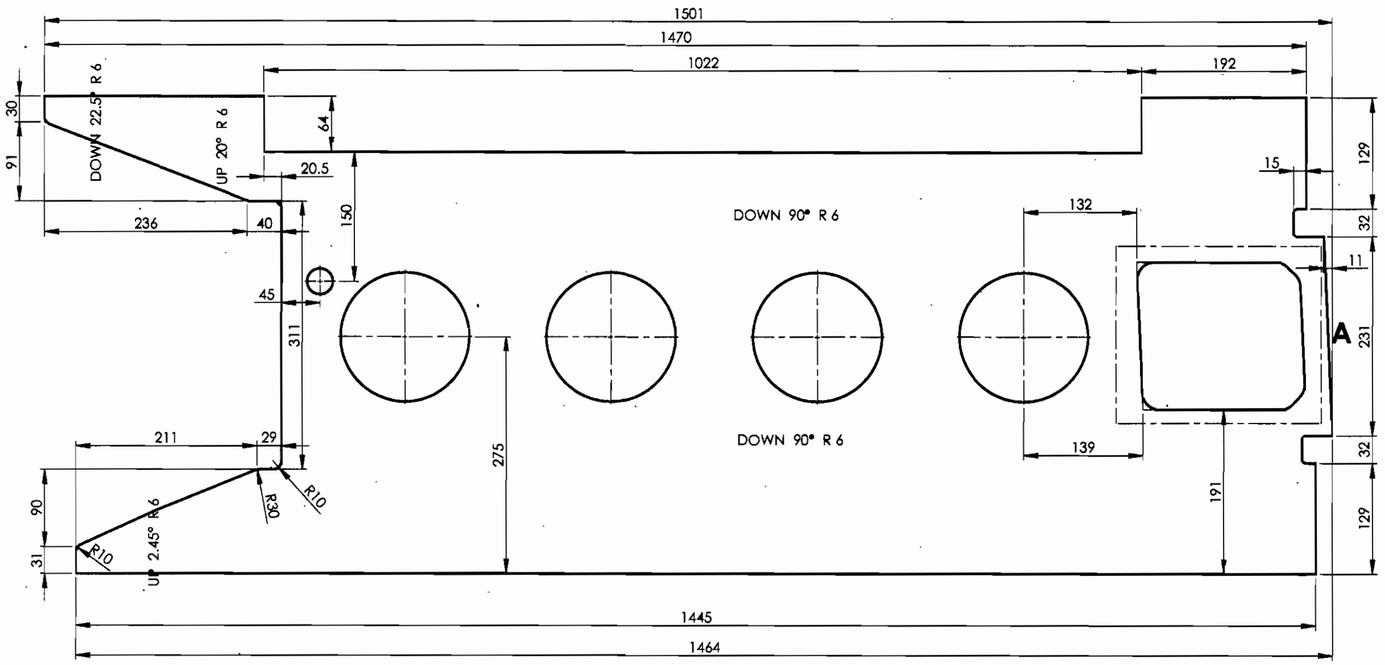

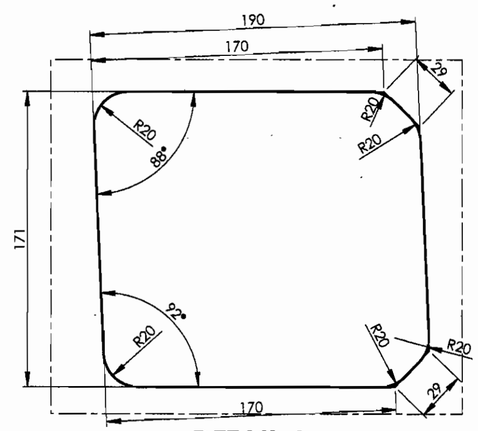

DETAIL A
SCALE 2 : 5

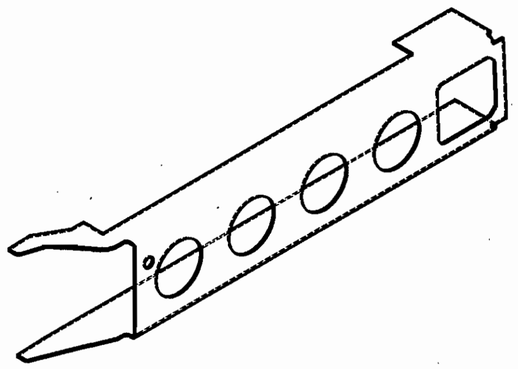

NOTE:

1. ALL EDGE PREPARATION SHALL BE DONE BY MACHINING ONLY TO GRADE No. N10.
2. REMOVE ALL SHARP EDGES & BURRS.

QTY	DESCRIPTION	DIMENSIONS	ITEM NO.	REF. DRGS	MATL.SPEC.	WT/UNIT IN KGS	REMARKS
1	BRACKET	6x553x1506	1		IRS M-41-97	25.48	

GROUP: 1-2 | SURFACE AREA IN Sq.m.: | WT/ASSY IN Kgs:

BRACKET

SCALE 1:10	SSE/D	
	CHD	
ALT a	ALTD	MUTHU KUMARAN S
	DRN	MUTHU KUMARAN S

INDIAN RAILWAY STANDARDS
INTEGRAL COACH FACTORY, CHENNAI - 600038

SHEET 1 OF 1

AAB12127 A2

13-03-2026	28-06-2024	
DATE OF LATEST ALT.	DATE OF FIRST ISSUE	AME/SME

REF.DRG.NO.

ALL DIMENSIONS ARE IN mm UNLESS OTHERWISE SPECIFIED. FOR UNTOLERANCED DIMENSIONS AND ROUGHNESS VALUES, REFER DRAWING NO ICF/STD-9-0-001.
ANY MANUAL ALTERATION SHALL AUTOMATICALLY RENDER THIS DRAWING INVALID. WELDING SYMBOLS ARE AS PER EN ISO 2553. WEIGHT GIVEN IN DRAWING IS FOR INDICATIVE PURPOSE ONLY

AAB12128

▽ ROUGH MACHINED	(01) ROUGH CLEANED
▽▽ FINISH MACHINED	(01b) BURRS REMOVED
▽▽▽ FINE FINISH MACHINED	(1.6) CHAMFERED

REVISIONS			
ALT.	ZONE	DESCRIPTION	APPROVED & DATE
a		Ø30 HOLE ADDED.	

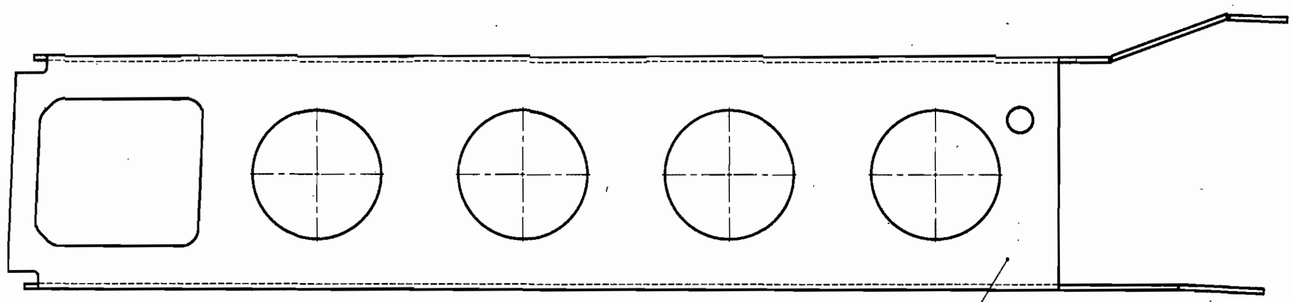

THIS ITEM IS OPPOSITE TO THE ITEM No AAB12127 SO REFER THE DRG. FOR DETAILS.

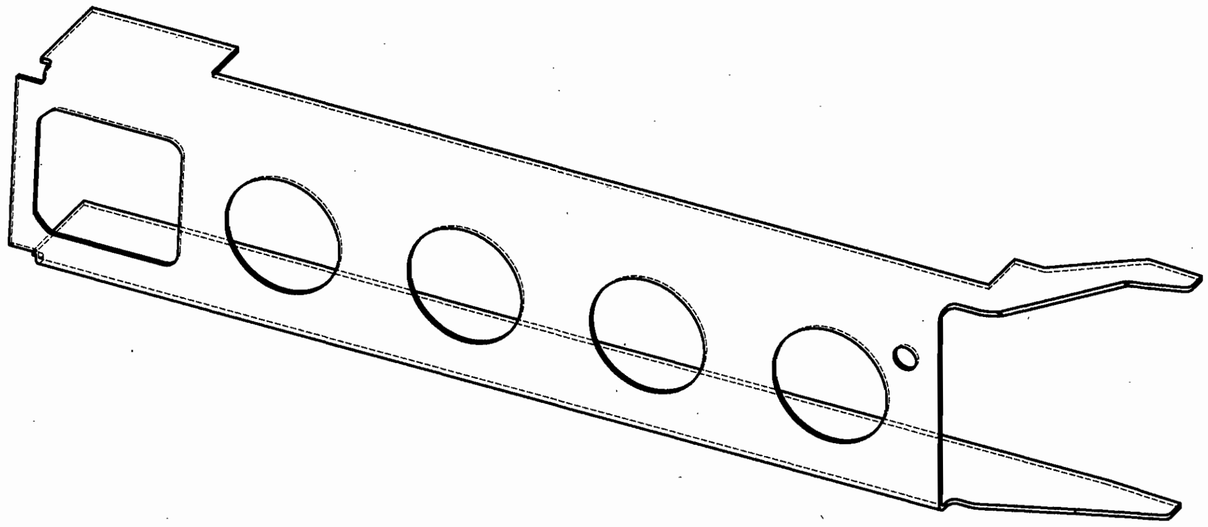

ALL DIMENSIONS ARE IN mm UNLESS OTHERWISE SPECIFIED. FOR UNTOLERANCED DIMENSIONS AND ROUGHNESS VALUES, REFER DRAWING NO ICF/STD-9-0-001.
ANY MANUAL ALTERATION SHALL AUTOMATICALLY RENDER THIS DRAWING INVALID. WELDING SYMBOLS ARE AS PER EN ISO 2553. WEIGHT GIVEN IN DRAWING IS FOR INDICATIVE PURPOSE ONLY

NOTE:

1. ALL EDGE PREPARATION SHALL BE DONE BY MACHINING ONLY TO GRADE No. N10.
2. REMOVE ALL SHARP EDGES & BURRS.

QTY	DESCRIPTION	DIMENSIONS	ITEM NO.	REF. DRGS	MATL.SPEC.	WT/UNIT IN KGS	REMARKS
1	BRACKET	6x553x1506	1		IRS M-41-97	25.36	

GROUP: 1-2 | SURFACE AREA IN Sq.m.: | WT/ASSY IN Kgs:

BRACKET

SCALE 1:10	SSE/D	
	CHD	
ALT a	ALTD	MUTHU KUMARAN S
	DRN	MUTHU KUMARAN S

INDIAN RAILWAY STANDARDS
INTEGRAL COACH FACTORY, CHENNAI - 600038

SHEET 1 OF 1

AAB12128 A2

DATE OF LATEST ALT.	DATE OF FIRST ISSUE	
13-03-2026	18-06-2024	AME/SME

REF.DRG.NO.

AAB12129

▽ ROUGH MACHINED	(01) ROUGH CLEANED
▽▽ FINISH MACHINED	(01b) BURRS REMOVED
▽▽▽ FINE FINISH MACHINED	(18) CHAMFERED

REVISIONS			
ALT.	ZONE	DESCRIPTION	APPROVED & DATE

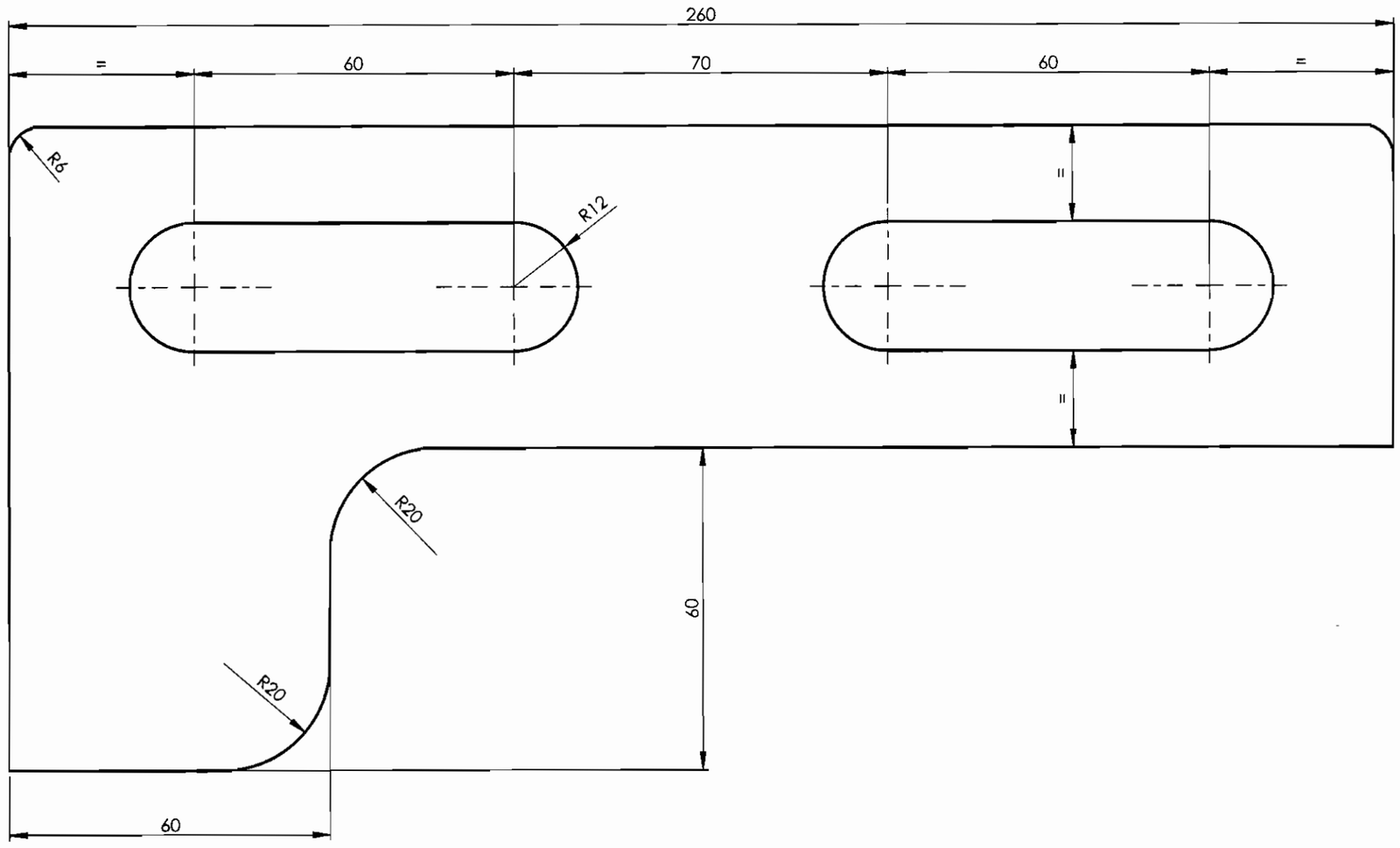

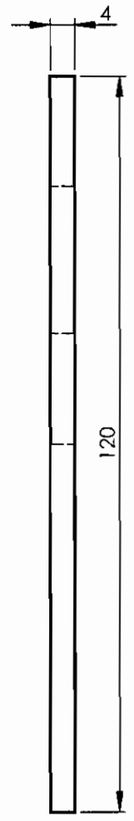

ALL DIMENSIONS ARE IN mm UNLESS OTHERWISE SPECIFIED. FOR UNTOLERANCED DIMENSIONS AND ROUGHNESS VALUES. REFER DRAWING NO ICF/STD-9-0-001.
ANY MANUAL ALTERATION SHALL AUTOMATICALLY RENDER THIS DRAWING INVALID. WELDING SYMBOLS ARE AS PER EN ISO 2553.
WEIGHT GIVEN IN DRAWING IS FOR INDICATIVE PURPOSE ONLY

NOTE:

1. ALL EDGE PREPARATION SHALL BE DONE BY MACHINING ONLY TO GRADE No. N10.
2. REMOVE ALL SHARP EDGES & BURRS.

QTY	DESCRIPTION	DIMENSIONS	ITEM NO.	REF. DRGS	MATL.SPEC.	WT/UNIT IN KGS	REMARKS
1	PLATE	4x120x260	1		IRS M-41-97	0.48	

GROUP: 1-2 | SURFACE AREA IN Sq.m.: | WT/ASSY IN Kgs:

PLATE

SCALE 1:2	SSE/D	
	CHD	
ALT. -	ALTD	
	DRN	MUTHU KUMARAN S

INDIAN RAILWAY STANDARDS
INTEGRAL COACH FACTORY, CHENNAI - 600038

SHEET 1 OF 1

AAB12129 | A3

DATE OF LATEST ALT.	DATE OF FIRST ISSUE	AME/SME
	06-06-2024	

REF.DRG.NO.

AAB12130

▽ ROUGH MACHINED	(01) ROUGH CLEANED
▽▽ FINISH MACHINED	(01b) BURRS REMOVED
▽▽▽ FINE FINISH MACHINED	(18) CHAMFERED

REVISIONS			
ALT.	ZONE	DESCRIPTION	APPROVED & DATE
a		DESIGN REVISED	

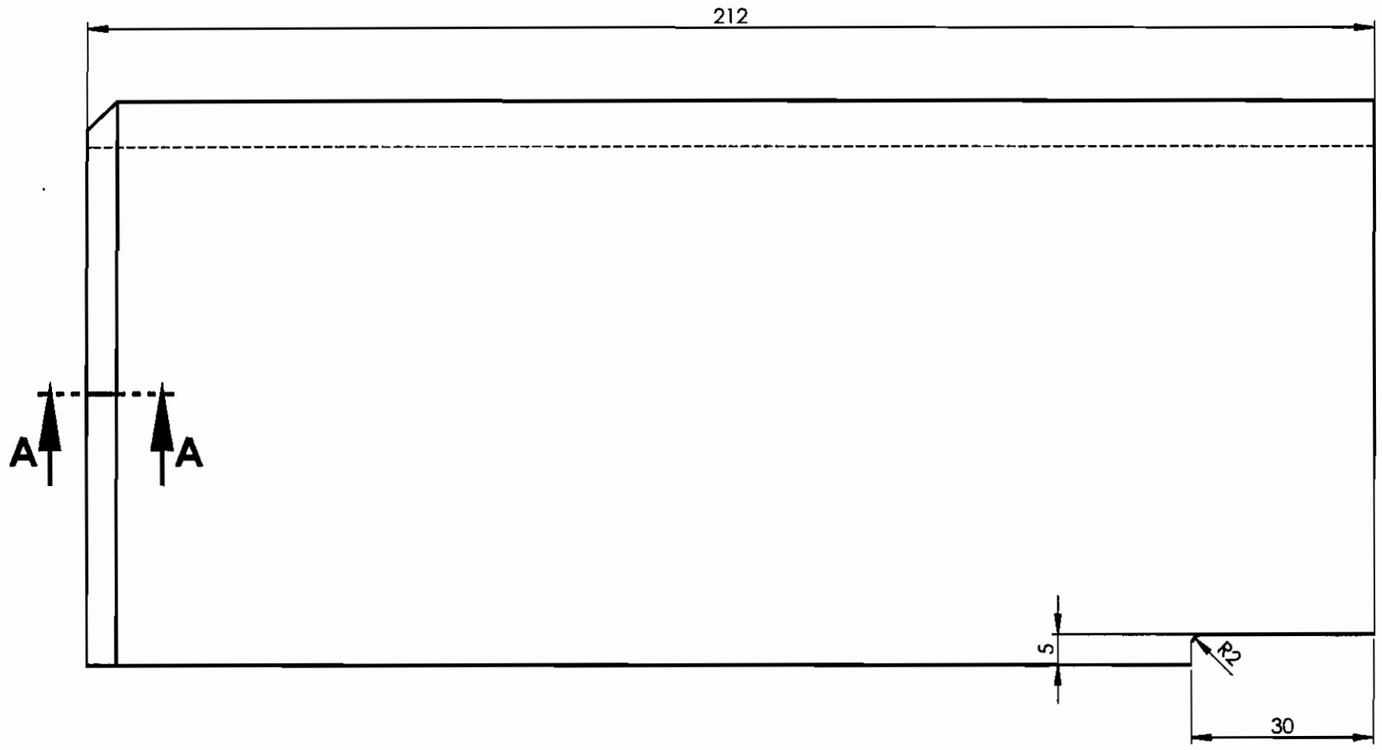

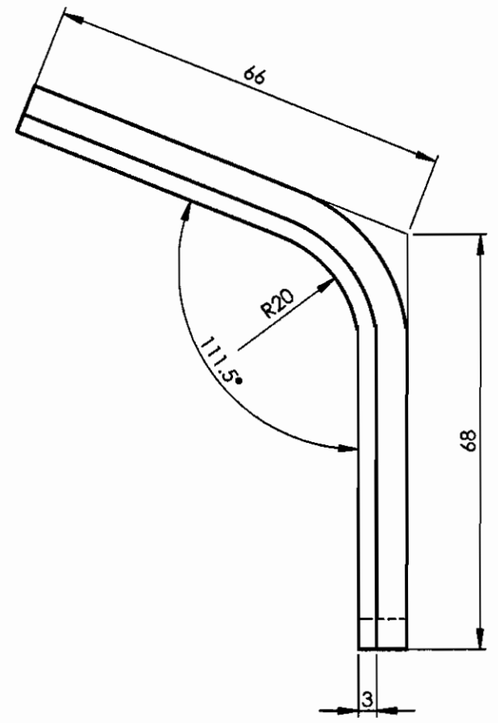

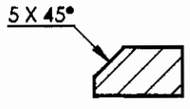

SECTION A-A
SCALE 1 : 1

NOTE:

1. ALL EDGE PREPARATION SHALL BE DONE BY MACHINING ONLY TO GRADE No. N10.
2. REMOVE ALL SHARP EDGES & BURRS.

QTY	DESCRIPTION	DIMENSIONS	ITEM NO.	REF. DRGS	MATL.SPEC.	WT/UNIT IN KGS	REMARKS
1	ANGLE	8x125x212	1		IRS M-41-97	1.63	

GROUP: 1-2 | SURFACE AREA IN Sq.m.: | WT/ASSY IN Kgs:

ANGLE

SCALE 1:2	SSE/D	
	CHD	
ALT. a	ALTD	MUTHU KUMARAN S
	DRN	MUTHU KUMARAN S

INDIAN RAILWAY STANDARDS
INTEGRAL COACH FACTORY, CHENNAI - 600038

SHEET 1 OF 1

AAB12130 A3

DATE OF LATEST ALT.	DATE OF FIRST ISSUE	AME/SME
12-07-2024	25-05-2024	

REF.DRG.NO.

ALL DIMENSIONS ARE IN mm UNLESS OTHERWISE SPECIFIED. FOR UNTOLERANCED DIMENSIONS AND ROUGHNESS VALUES, REFER DRAWING NO ICF/STD-9-0-001.
ANY MANUAL ALTERATION SHALL AUTOMATICALLY RENDER THIS DRAWING INVALID. WELDING SYMBOLS ARE AS PER EN ISO 2553.
WEIGHT GIVEN IN DRAWING IS FOR INDICATIVE PURPOSE ONLY

AAB12131

▽ ROUGH MACHINED	(01) ROUGH CLEANED
▽▽ FINISH MACHINED	(01b) BURRS REMOVED
▽▽▽ FINE FINISH MACHINED	(18) CHAMFERED

REVISIONS			
ALT.	ZONE	DESCRIPTION	APPROVED & DATE
a		DESIGN REVISED	

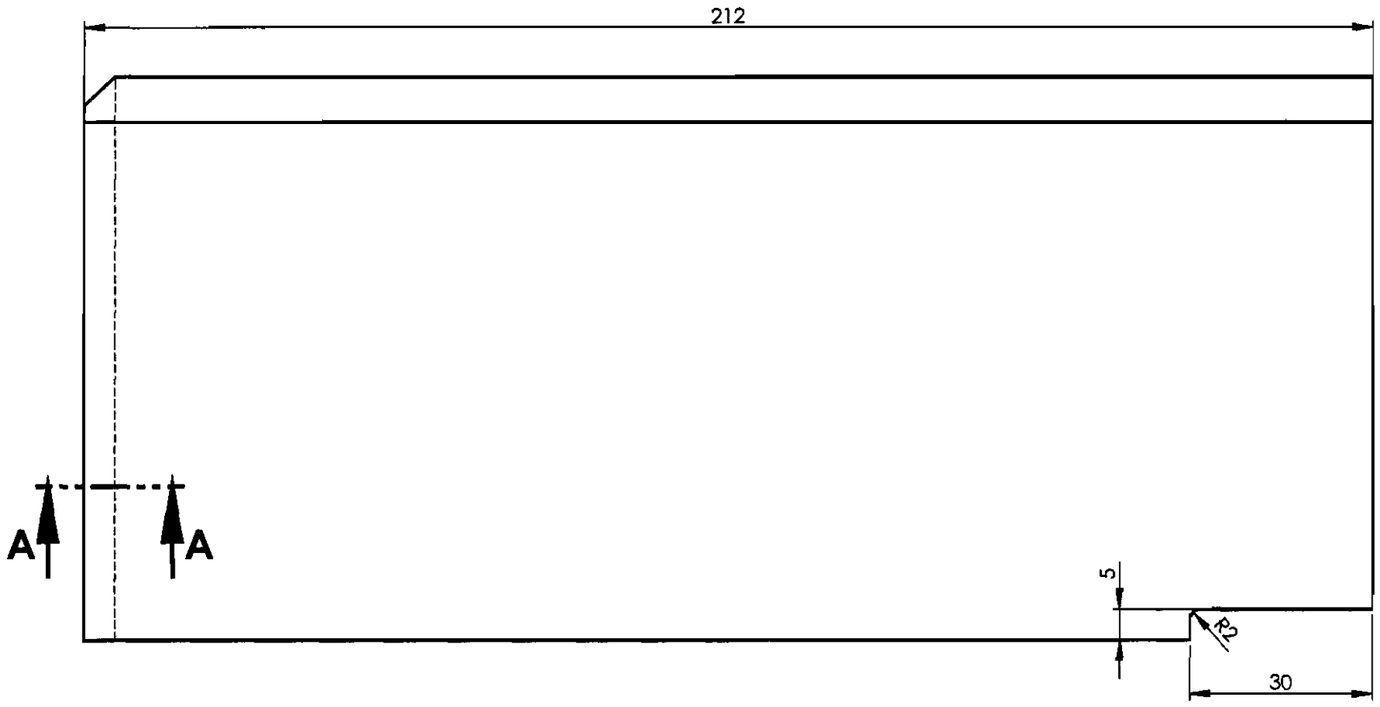

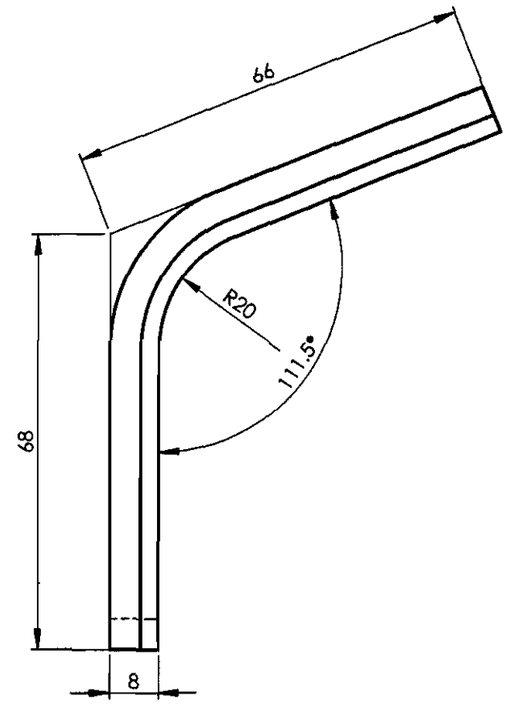

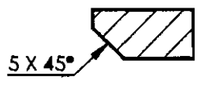

SECTION A-A
SCALE 1 : 1

NOTE:

1. ALL EDGE PREPARATION SHALL BE DONE BY MACHINING ONLY TO GRADE No. N10.
2. REMOVE ALL SHARP EDGES & BURRS.

QTY	DESCRIPTION	DIMENSIONS	ITEM NO.	REF. DRGS	MATL.SPEC.	WT/UNIT IN KGS	REMARKS
1	ANGLE	8x125x212	1		IRS M-41-97	1.63	

GROUP: 1-2 | SURFACE AREA IN Sq.m.: | WT/ASSY IN Kgs:

ANGLE

SCALE		
1:2	SSE/D	
	CHD	
ALT. a	ALTD	MUTHU KUMARAN S
	DRN	MUTHU KUMARAN S

INDIAN RAILWAY STANDARDS
INTEGRAL COACH FACTORY, CHENNAI - 600038

SHEET 1 OF 1

AAB12131 | A3

DATE OF LATEST ALT.	DATE OF FIRST ISSUE	AME/SME
12-07-2024	25-05-2024	

REF.DRG.NO.

ALL DIMENSIONS ARE IN mm UNLESS OTHERWISE SPECIFIED. FOR UNTOLERANCED DIMENSIONS AND ROUGHNESS VALUES, REFER DRAWING NO ICF/STD-9-0-001.
ANY MANUAL ALTERATION SHALL AUTOMATICALLY RENDER THIS DRAWING INVALID. WELDING SYMBOLS ARE AS PER EN ISO 2553.
WEIGHT GIVEN IN DRAWING IS FOR INDICATIVE PURPOSE ONLY

AAB12132

▽ ROUGH MACHINED	(01) ROUGH CLEANED
▽▽ FINISH MACHINED	(01b) BURRS REMOVED
▽▽▽ FINE FINISH MACHINED	(18) CHAMFERED

REVISIONS			
ALT.	ZONE	DESCRIPTION	APPROVED & DATE
a		DESIGN REVISED.	

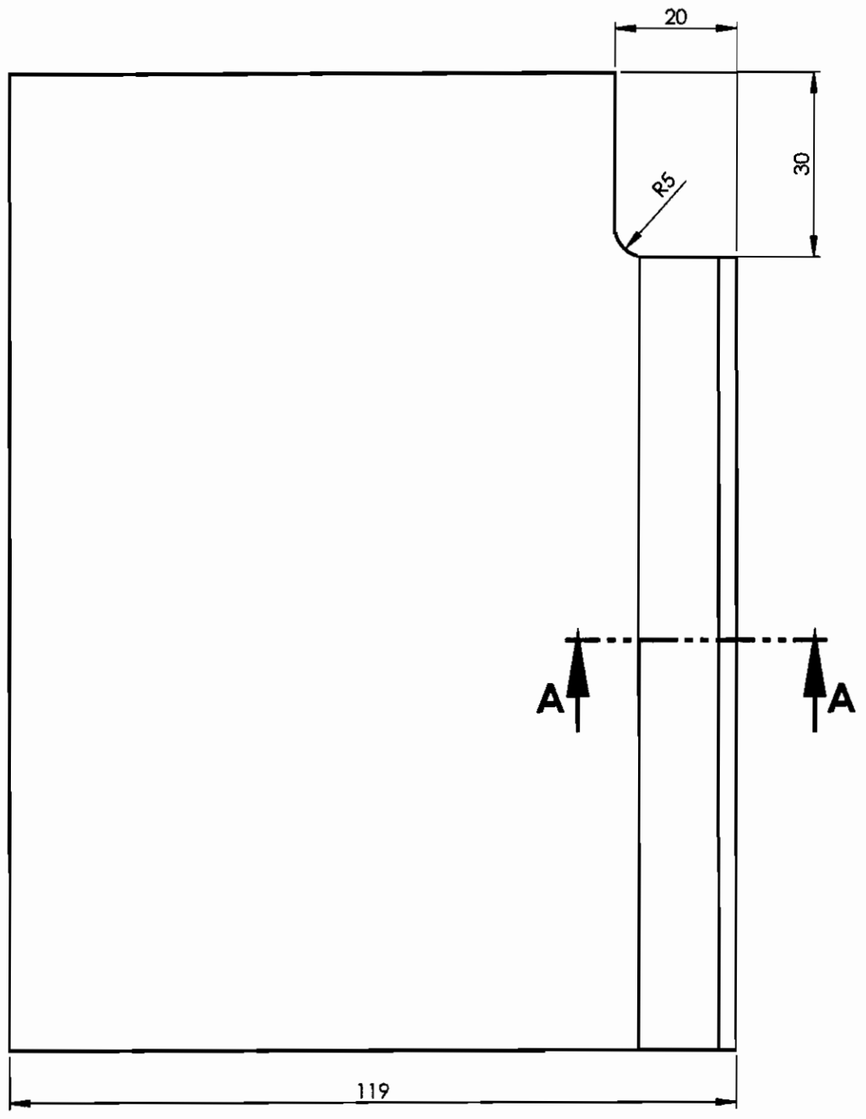

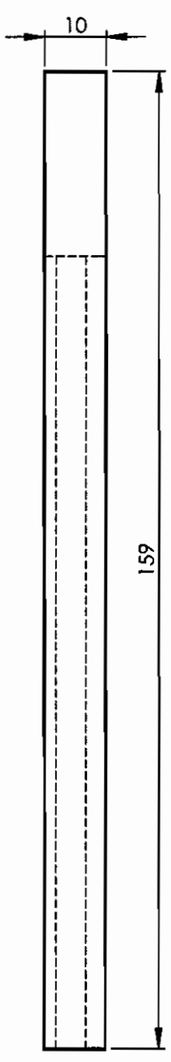

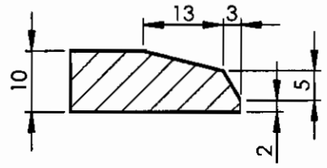

SECTION A-A
SCALE 1 : 1

ALL DIMENSIONS ARE IN mm UNLESS OTHERWISE SPECIFIED. FOR UNTOLERANCED DIMENSIONS AND ROUGHNESS VALUES, REFER DRAWING NO ICF/STD-9-0-001.
ANY MANUAL ALTERATION SHALL AUTOMATICALLY RENDER THIS DRAWING INVALID. WELDING SYMBOLS ARE AS PER EN ISO 2553.
WEIGHT GIVEN IN DRAWING IS FOR INDICATIVE PURPOSE ONLY

NOTE:

1. ALL EDGE PREPARATION SHALL BE DONE BY MACHINING ONLY TO GRADE No. N10.
2. REMOVE ALL SHARP EDGES & BURRS.

QTY	DESCRIPTION	DIMENSIONS	ITEM NO.	REF. DRGS	MATL.SPEC.	WT/UNIT IN KGS	REMARKS
1	PLATE	10x119x159	1		IRS M-41-97	1.40	

GROUP: 1-2 | SURFACE AREA IN Sq.m.: | WT/ASSY IN Kgs:

PLATE

SCALE 1:2	SSE/D	
	CHD	
ALT. a	ALTD	MUTHU KUMARAN S
	DRN	MUTHU KUMARAN S

REF.DRG.NO.	DATE OF LATEST ALT.	DATE OF FIRST ISSUE	AME/SME
	12-07-2024	25-05-2024	

INDIAN RAILWAY STANDARDS
INTEGRAL COACH FACTORY, CHENNAI - 600038

SHEET 1 OF 1

AAB12132 A3

AAB12133

▽ ROUGH MACHINED	(01) ROUGH CLEANED
▽▽ FINISH MACHINED	(01b) BURRS REMOVED
▽▽▽ FINE FINISH MACHINED	(18) CHAMFERED

REVISIONS			
ALT.	ZONE	DESCRIPTION	APPROVED & DATE
a		DESIGN REVISED.	

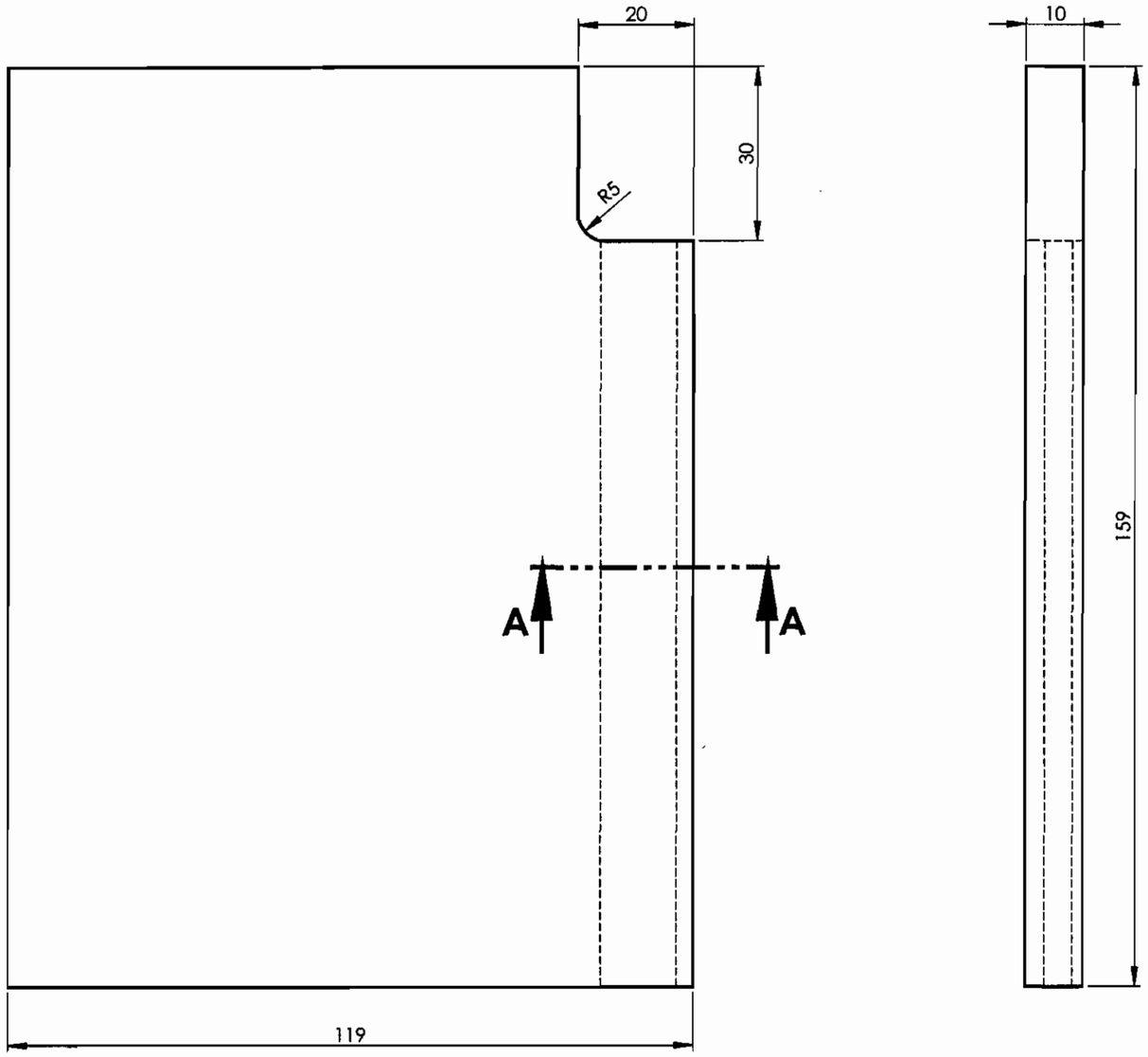

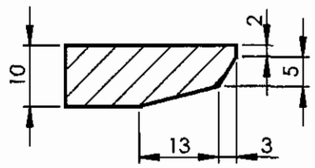

SECTION A-A
SCALE 1 : 1

ALL DIMENSIONS ARE IN mm UNLESS OTHERWISE SPECIFIED. FOR UNTOLERANCED DIMENSIONS AND ROUGHNESS VALUES, REFER DRAWING NO ICF/STD-9-0-001.
ANY MANUAL ALTERATION SHALL AUTOMATICALLY RENDER THIS DRAWING INVALID. WELDING SYMBOLS ARE AS PER EN ISO 2553.
WEIGHT GIVEN IN DRAWING IS FOR INDICATIVE PURPOSE ONLY

NOTE:

1. ALL EDGE PREPARATION SHALL BE DONE BY MACHINING ONLY TO GRADE No. N10.
2. REMOVE ALL SHARP EDGES & BURRS.

QTY	DESCRIPTION	DIMENSIONS	ITEM NO.	REF. DRGS	MATL.SPEC.	WT/UNIT IN KGS	REMARKS
1	PLATE	10x119x159	1		IRS M-41-97	1.40	

GROUP: 1-2 | SURFACE AREA IN Sq.m.: | WT/ASSY IN Kgs:

PLATE

SCALE 1:2	SSE/D	
	CHD	
ALT. a	ALTD	MUTHU KUMARAN S
	DRN	MUTHU KUMARAN S

REF.DRG.NO.	DATE OF LATEST ALT.	DATE OF FIRST ISSUE	AME/SME
	16-07-2024	05-06-2024	

INDIAN RAILWAY STANDARDS
INTEGRAL COACH FACTORY, CHENNAI - 600038

SHEET 1 OF 1

AAB12133 A3